**JULY 14, 2004 ( P= 3.31, Bo = 4.26, Lo = 110.57)**

KITT PEAK MAGNETOGRAM--SOLIS

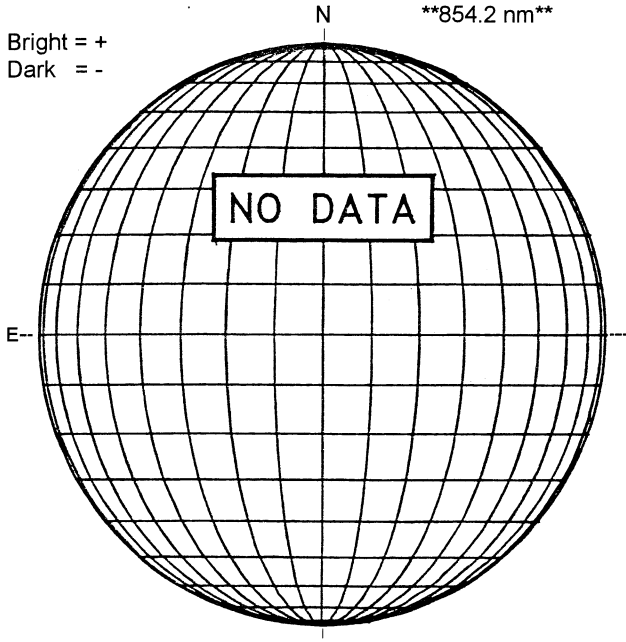


STANFORD MAGNETOGRAM

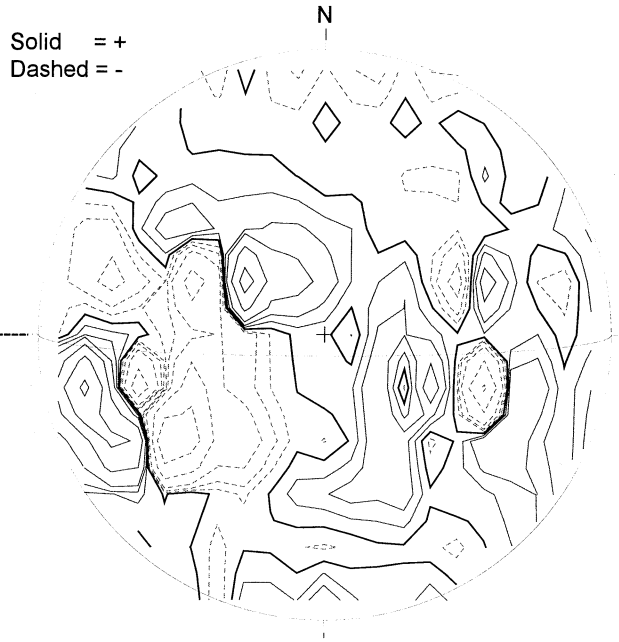


MT. WILSON MAGNETOGRAM

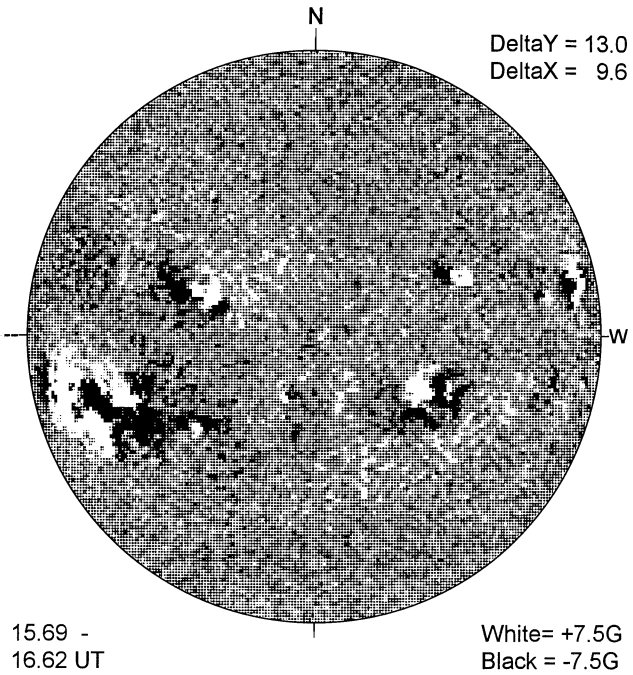


BIG BEAR H-ALPHA

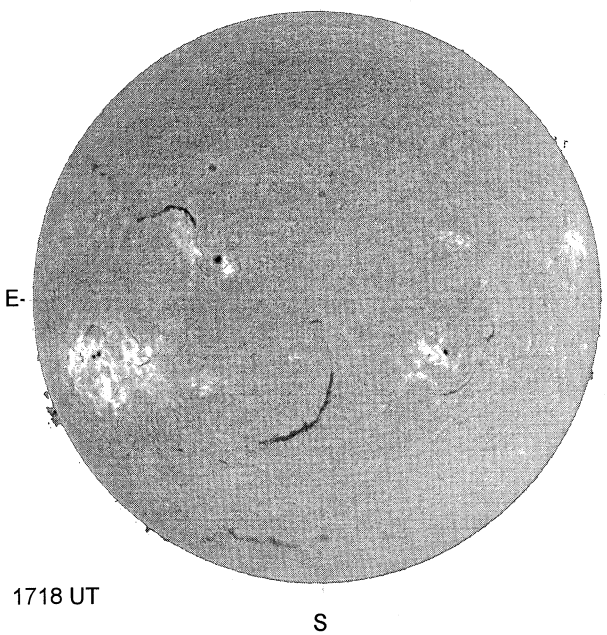


HOLLOMAN SUNSPOTS

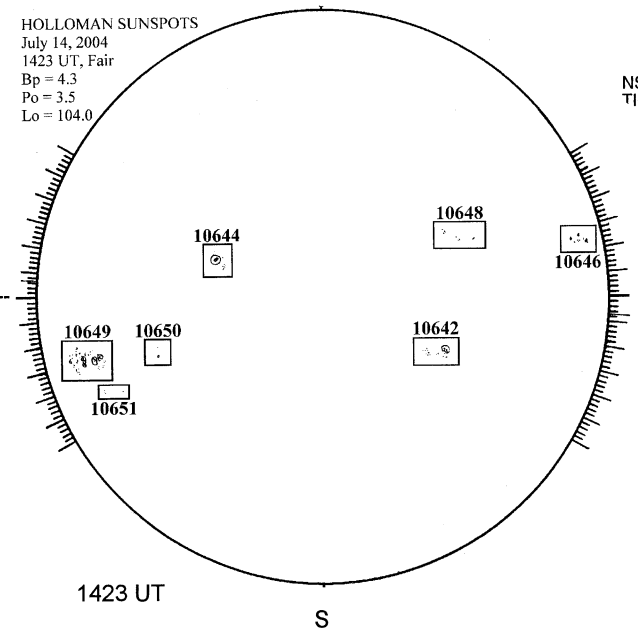

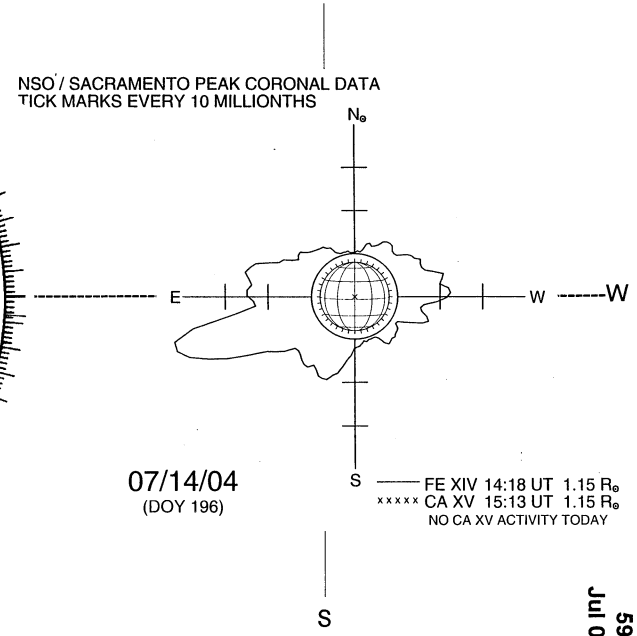
SACRAMENTO PEAK CORONA (1.15 Radii)----