JULY 9, 2004 (P= 1.07, Bo = 3.76, Lo = 176.74)

KITT PEAK MAGNETOGRAM--SOLIS

Bright = +
Dark = -

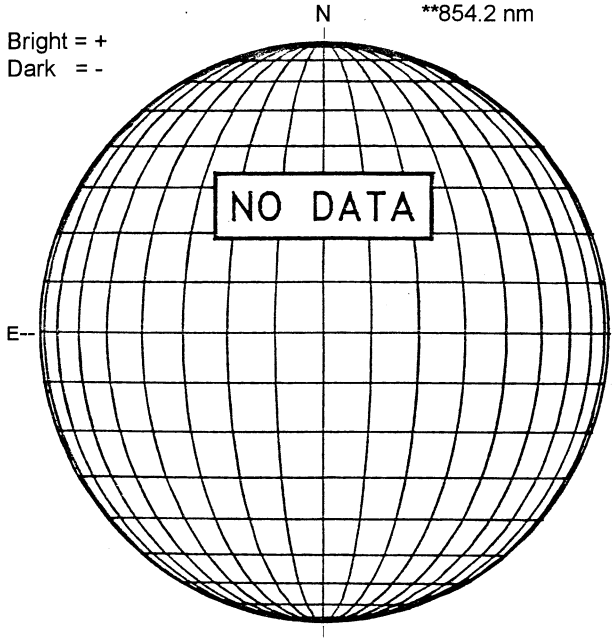

STANFORD MAGNETOGRAM

Solid = +
Dashed = -

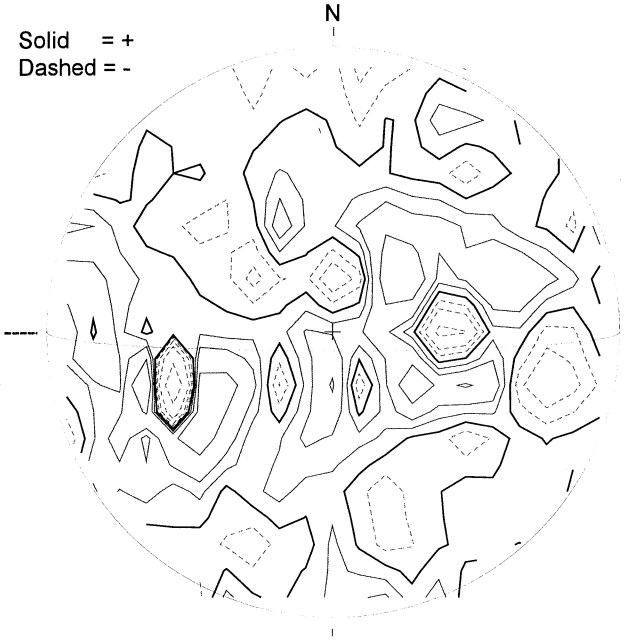

1843 UT

MT. WILSON MAGNETOGRAM

DeltaY = 13.0
DeltaX = 9.6

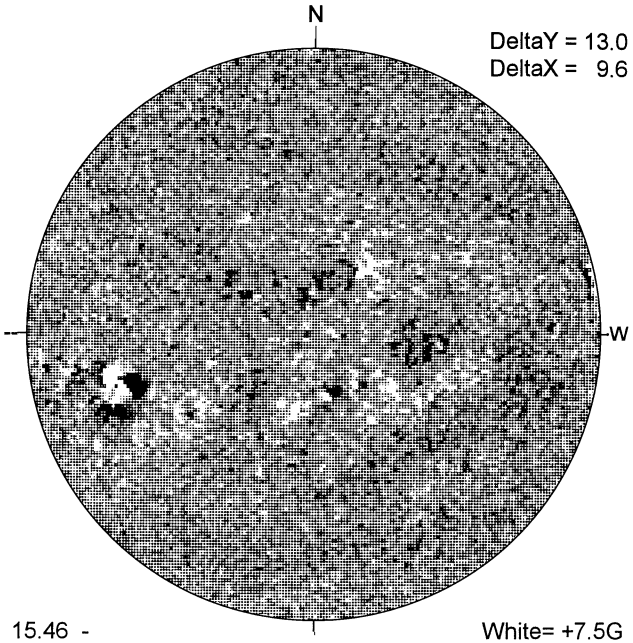

15.46 -
16.38 UT

White= +7.5G
Black = -7.5G

BIG BEAR H-ALPHA

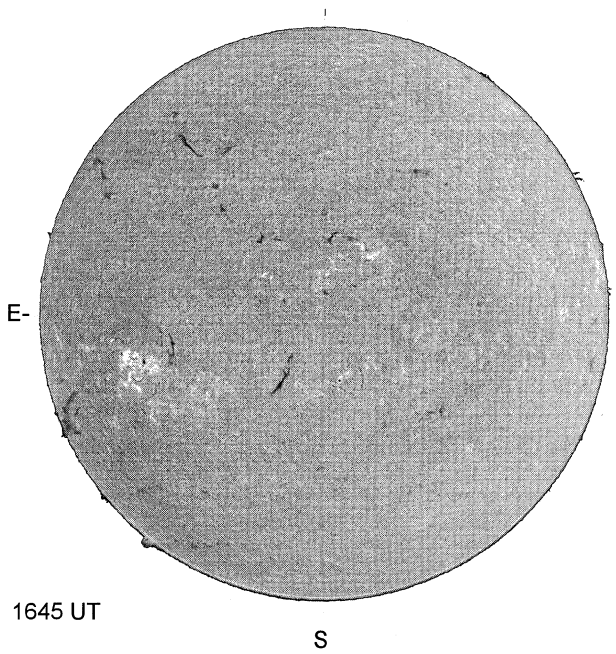

1645 UT

HOLLOMAN SUNSPOTS

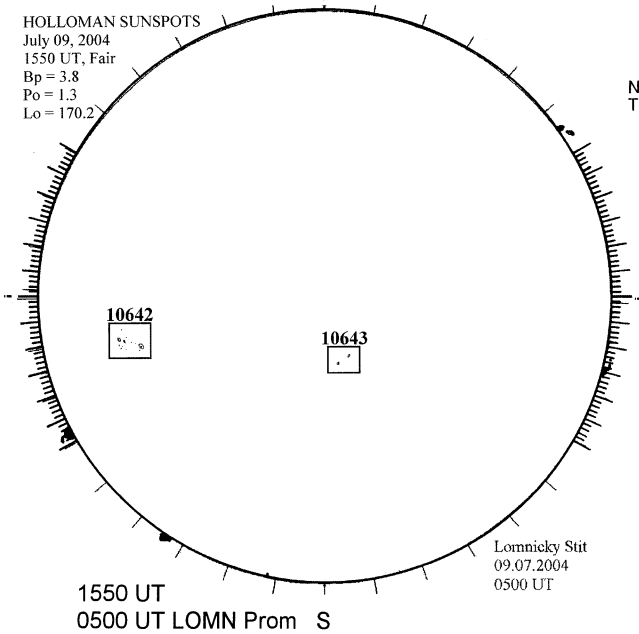

1550 UT
0500 UT LOMN Prom S

SACRAMENTO PEAK CORONA (1.15 Radii)----

NSO / SACRAMENTO PEAK CORONAL DATA
TICK MARKS EVERY 10 MILLIONTHS

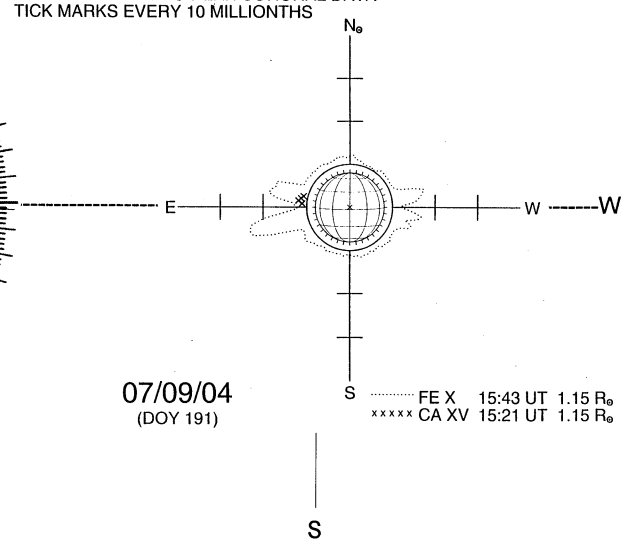

07/09/04
(DOY 191)