MAY 20, 2004 (P= -19.43, Bo = -2.05, Lo = 118.48)

KITT PEAK MAGNETOGRAM--SOLIS

N **854.2 nm**

Bright = +
Dark = -

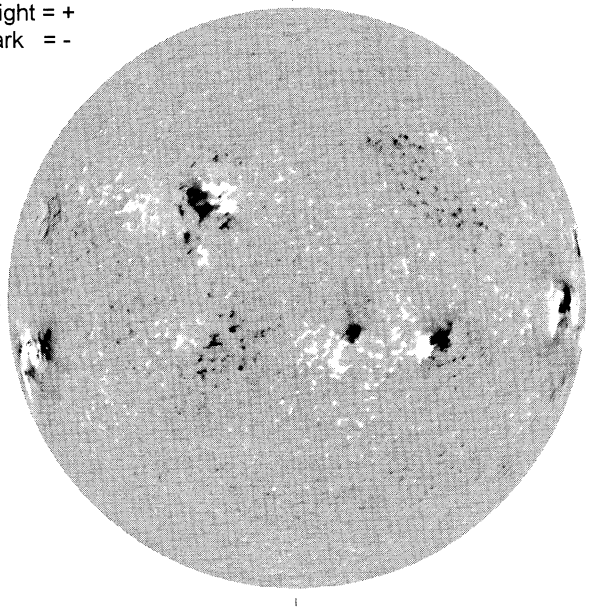

E--

1716 UT

STANFORD MAGNETOGRAM

N

Solid = +
Dashed = -

2150 UT

MT. WILSON MAGNETOGRAM

N

DeltaY = 13.1
DeltaX = 9.6

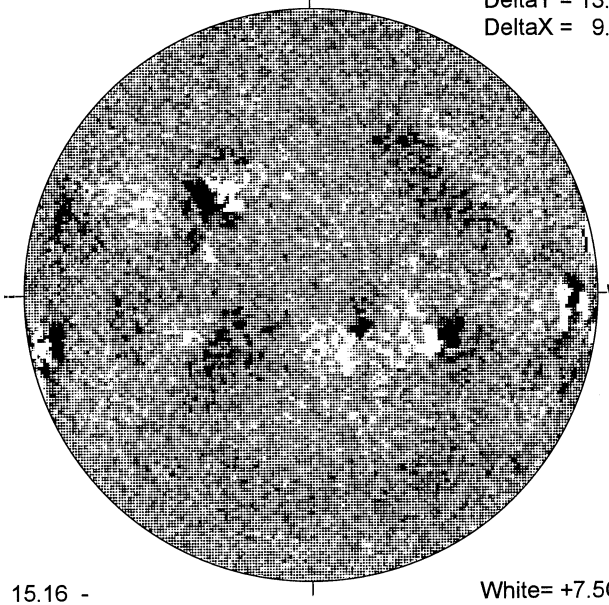

W

15.16 -
16.09 UT

White= +7.5G
Black = -7.5G

---- BIG BEAR H-ALPHA

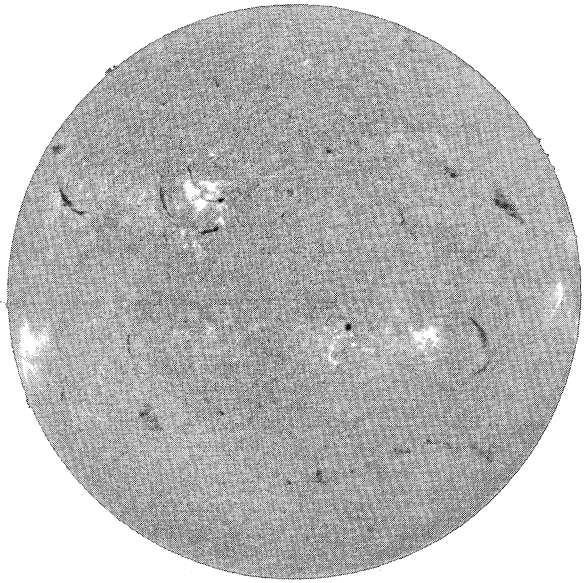

E-

1635 UT

S

HOLLOMAN SUNSPOTS

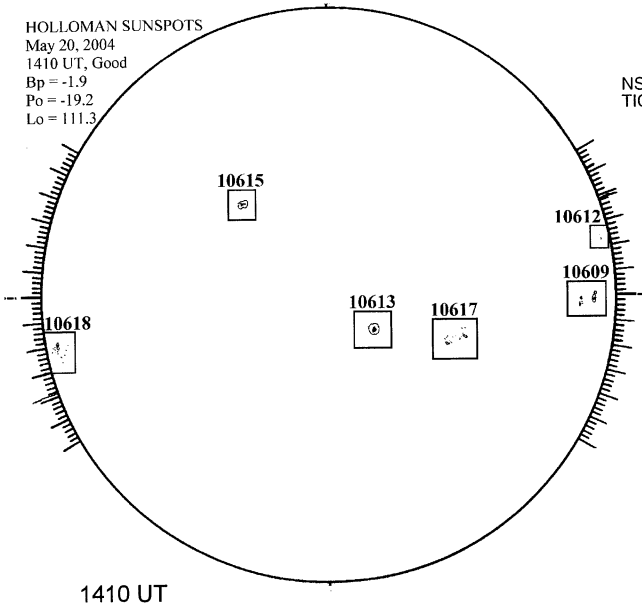

1410 UT

S

SACRAMENTO PEAK CORONA (1.15 Radii)----

NSO / SACRAMENTO PEAK CORONAL DATA
TICK MARKS EVERY 10 MILLIONTHS

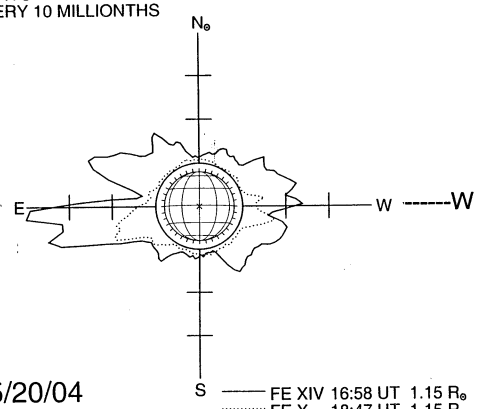

05/20/04
(DOY 141)

FE XIV 16:58 UT 1.15 R⊙
FE X 18:47 UT 1.15 R⊙
xxxxx CA XV 17:53 UT 1.15 R⊙
NO CA XV ACTIVITY TODAY

S