MAY 14, 2004 (P= -21.16, Bo = -2.74, Lo = 197.84)

KITT PEAK MAGNETOGRAM--SOLIS

854.2 nm

Bright = +
Dark = -

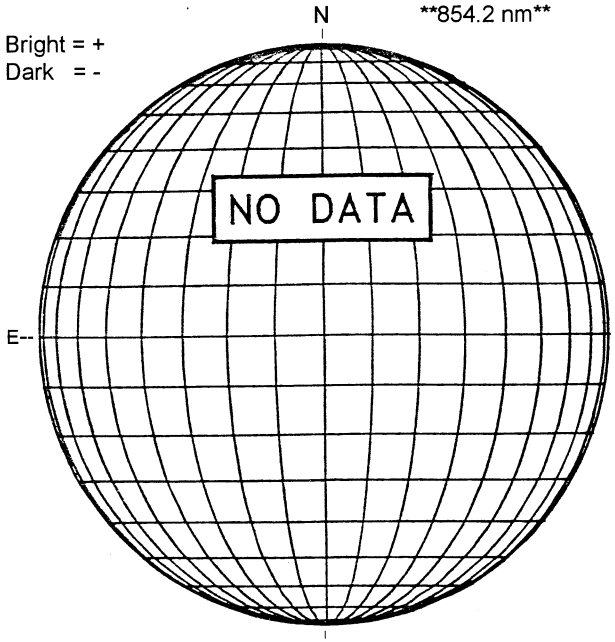

STANFORD MAGNETOGRAM

Solid = +
Dashed = -

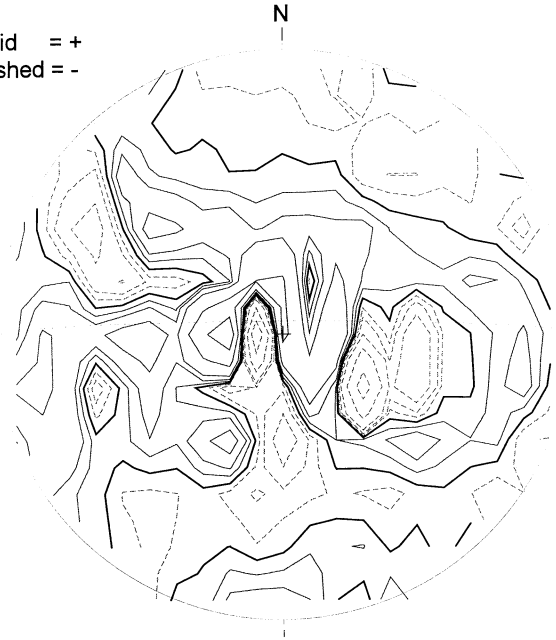

2253 UT

MT. WILSON MAGNETOGRAM

DeltaY = 13.1
DeltaX = 9.6

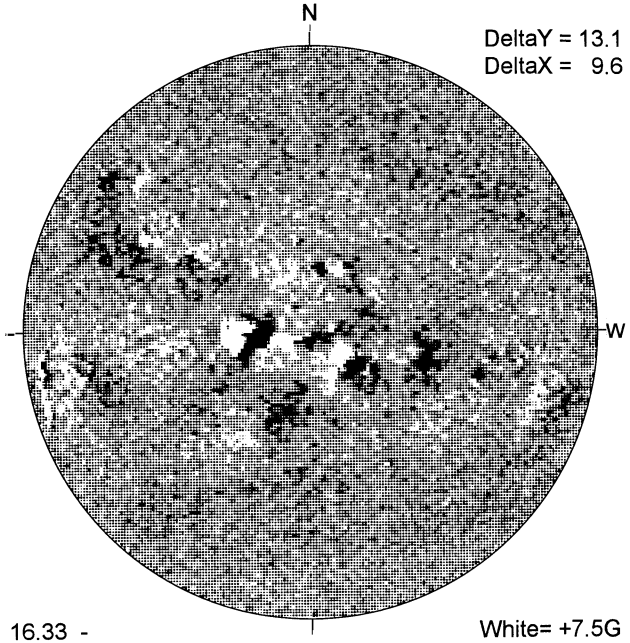

16.33 -
17.26 UT

White= +7.5G
Black = -7.5G

BIG BEAR H-ALPHA

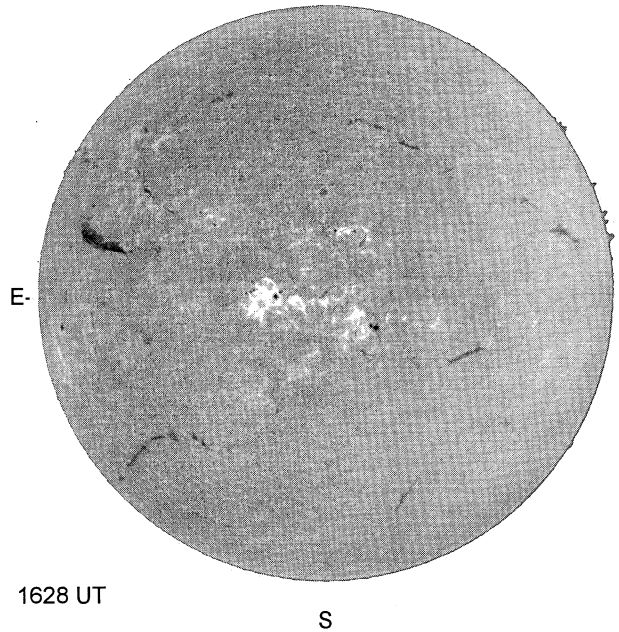

1628 UT

HOLLOMAN SUNSPOTS

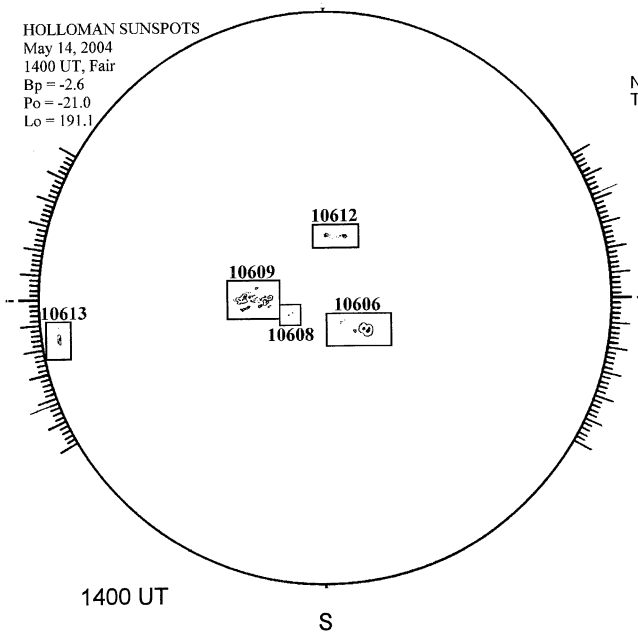

1400 UT

SACRAMENTO PEAK CORONA (1.15 Radii)----

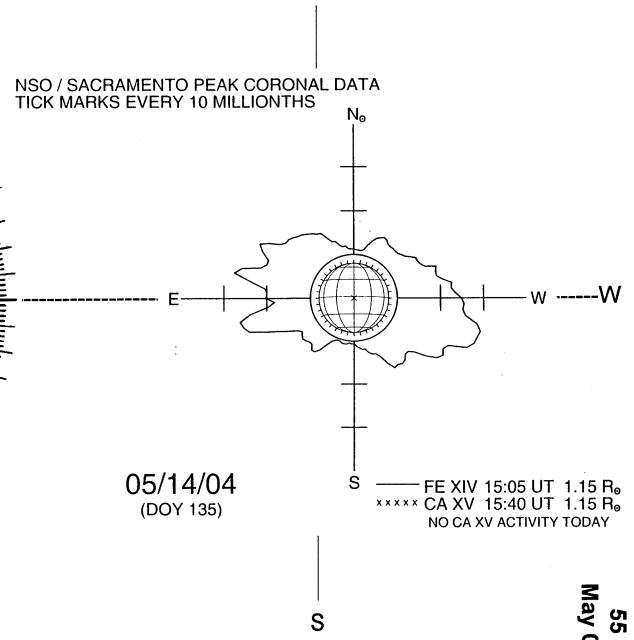

05/14/04
(DOY 135)