MAY 13, 2004 (P= -21.43, Bo = -2.86, Lo = 211.07)

KITT PEAK MAGNETOGRAM--SOLIS

Bright = +
Dark = -

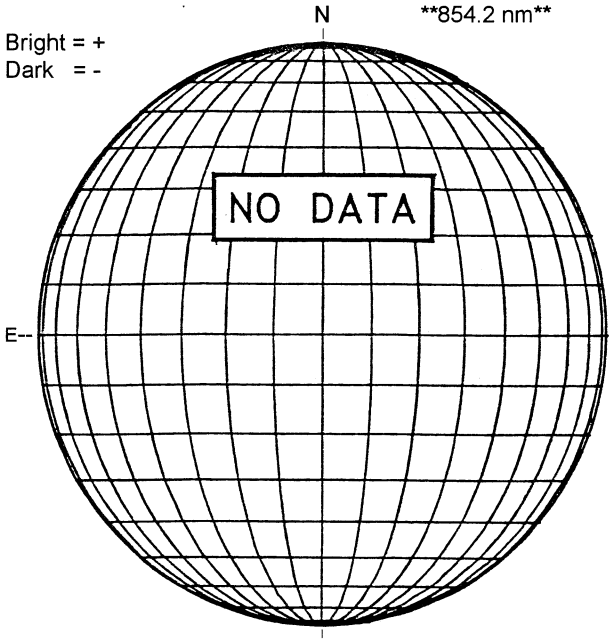

STANFORD MAGNETOGRAM

Solid = +
Dashed = -

2159 UT

MT. WILSON MAGNETOGRAM

DeltaY = 13.1
DeltaX = 9.6

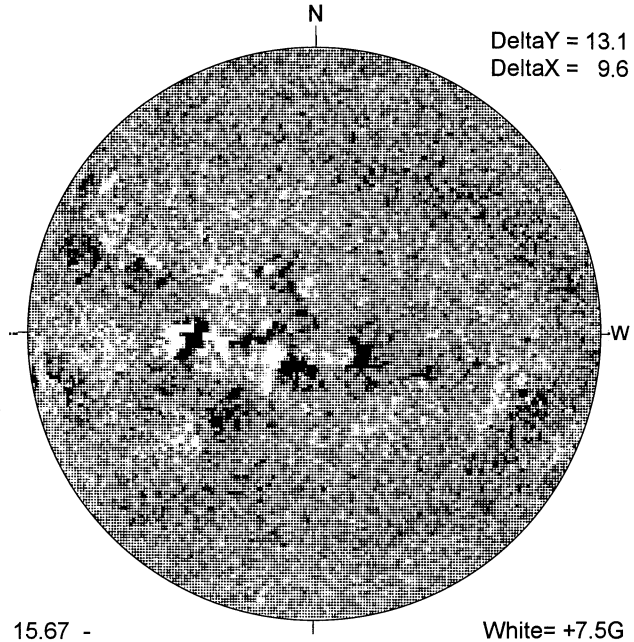

15.67 -
16.60 UT

White= +7.5G
Black = -7.5G

BIG BEAR H-ALPHA

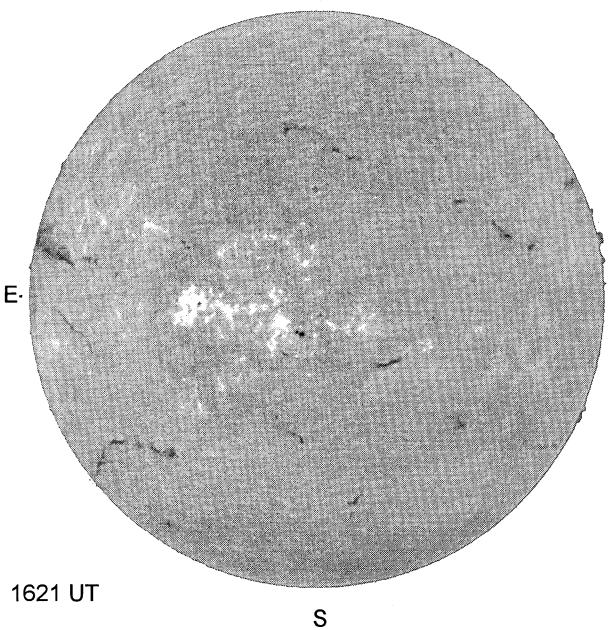

1621 UT

S

HOLLOMAN SUNSPOTS

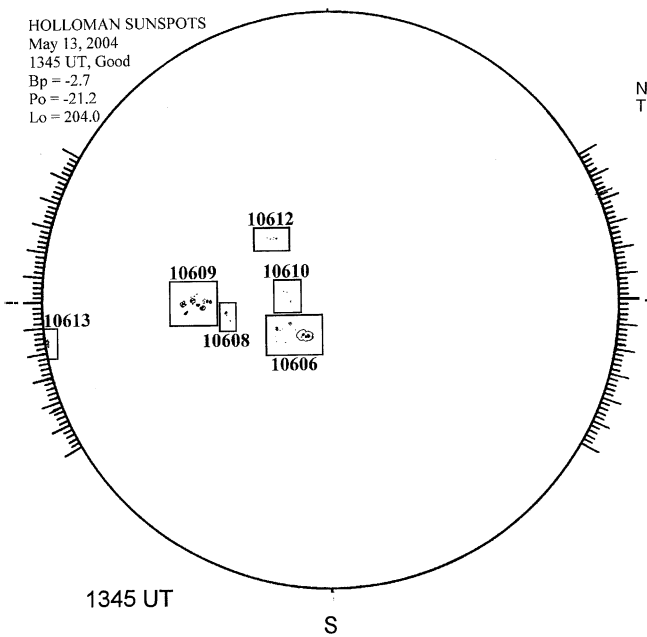

1345 UT

S

SACRAMENTO PEAK CORONA (1.15 Radii)----

NSO / SACRAMENTO PEAK CORONAL DATA
TICK MARKS EVERY 10 MILLIONTHS

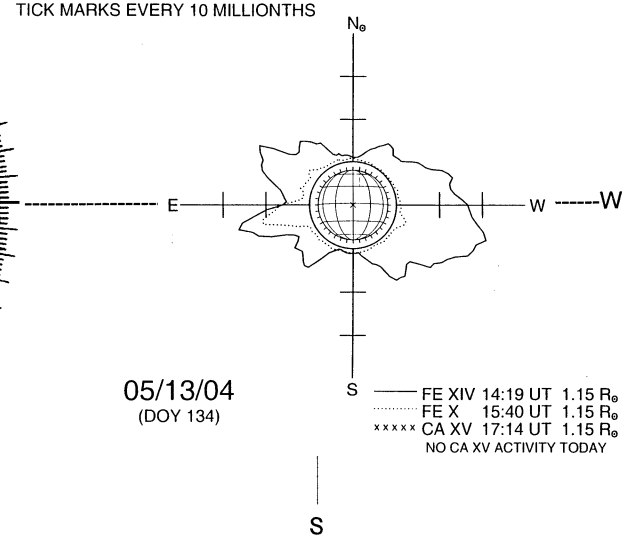

05/13/04
(DOY 134)

S