MAY 11, 2004 (P= -21.94, Bo = -3.08, Lo = 237.52)

KITT PEAK MAGNETOGRAM--SOLIS

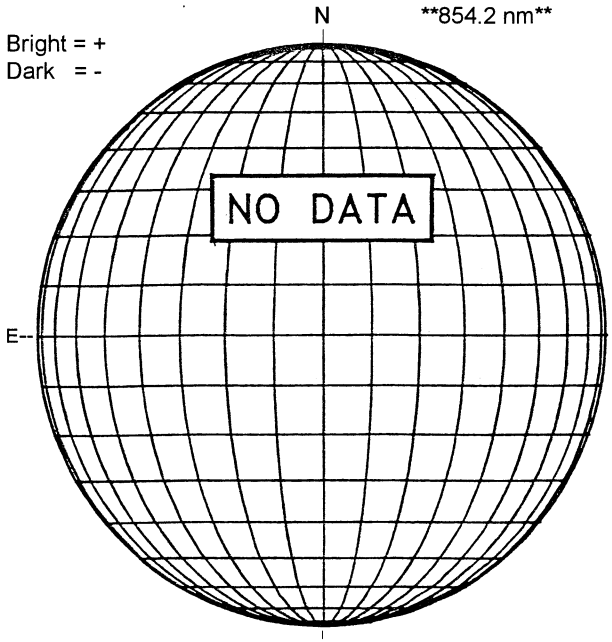

STANFORD MAGNETOGRAM

MT. WILSON MAGNETOGRAM

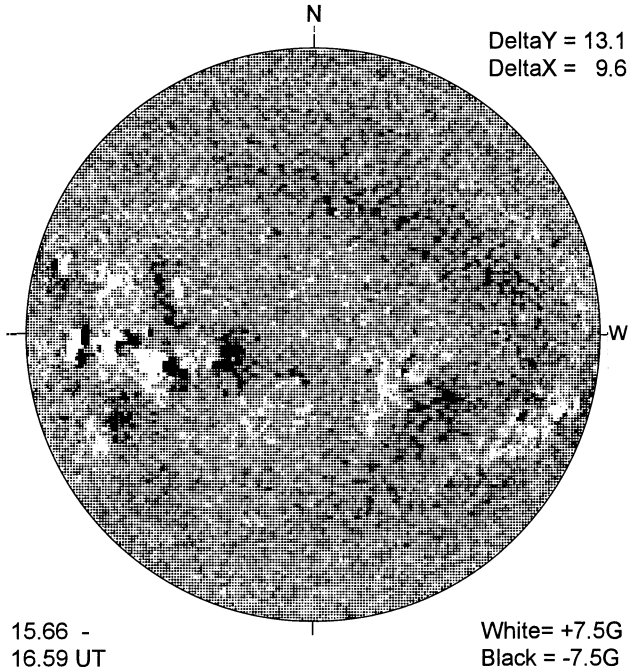

BIG BEAR H-ALPHA

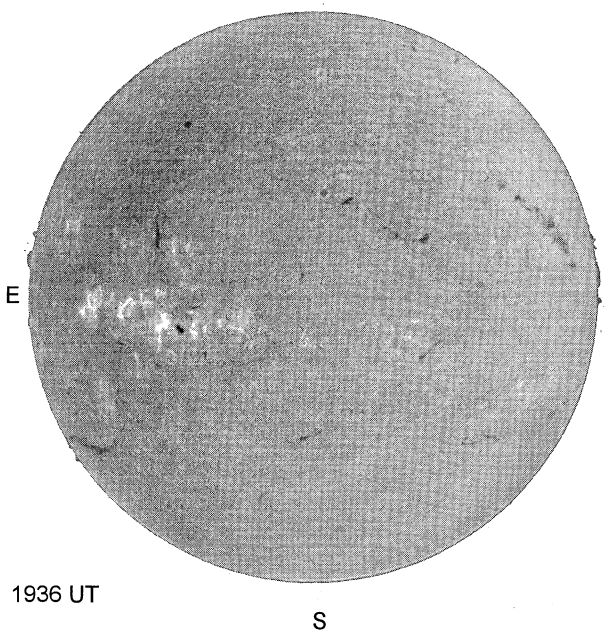

HOLLOMAN SUNSPOTS

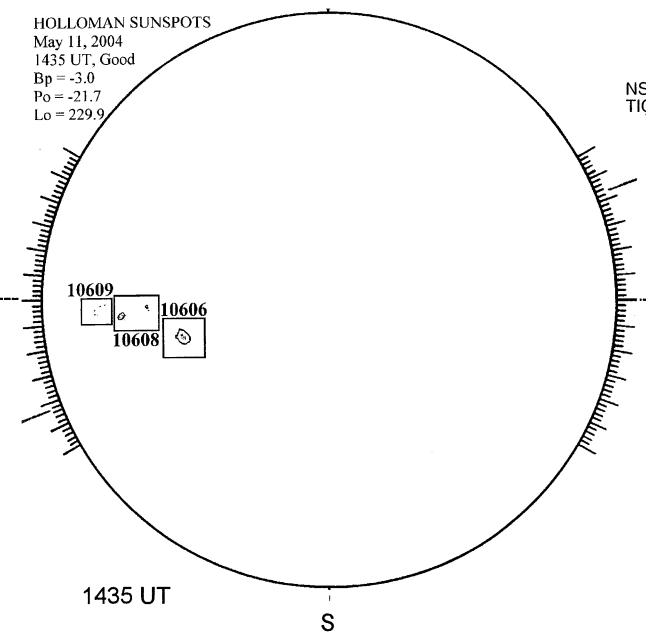
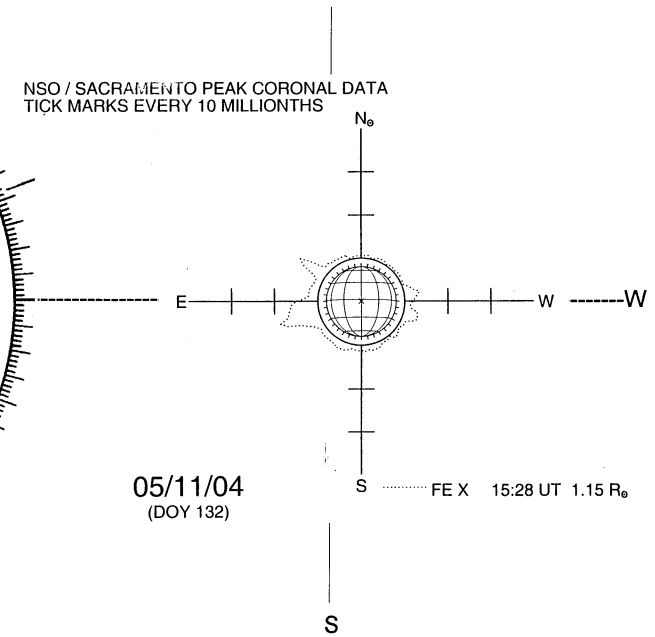
SACRAMENTO PEAK CORONA (1.15 Radii)----