MAY 6, 2004 (P= -23.10, Bo = -3.62, Lo = 303.63)

KITT PEAK MAGNETOGRAM--SOLIS

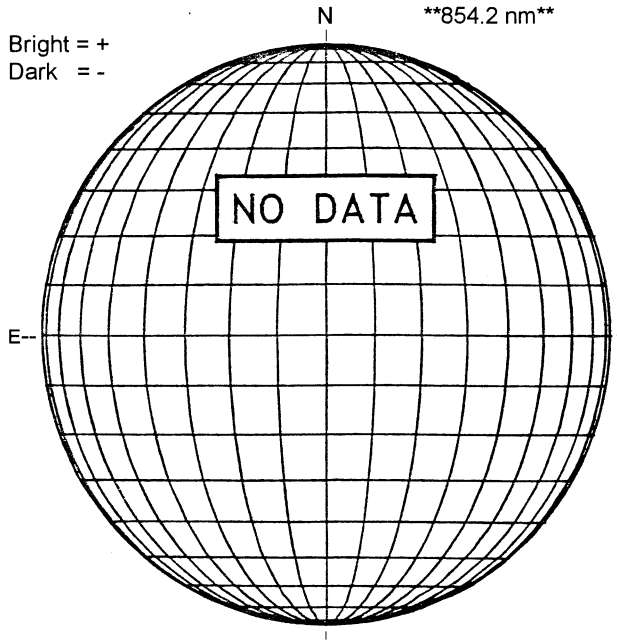

STANFORD MAGNETOGRAM

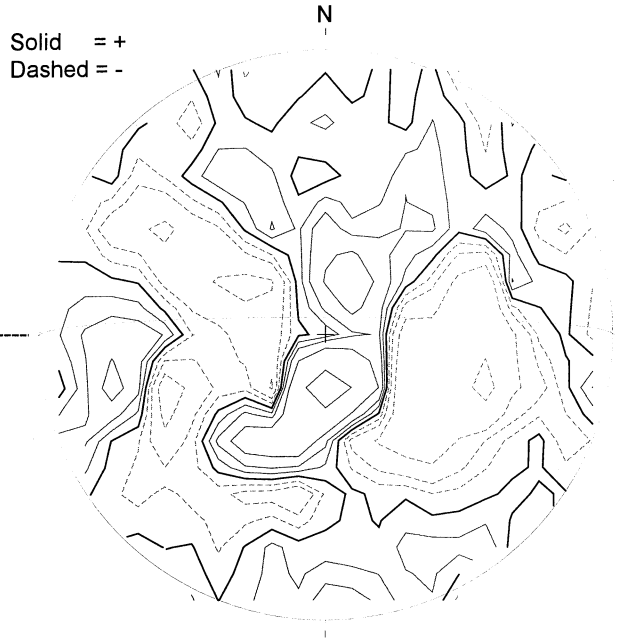

MT. WILSON MAGNETOGRAM

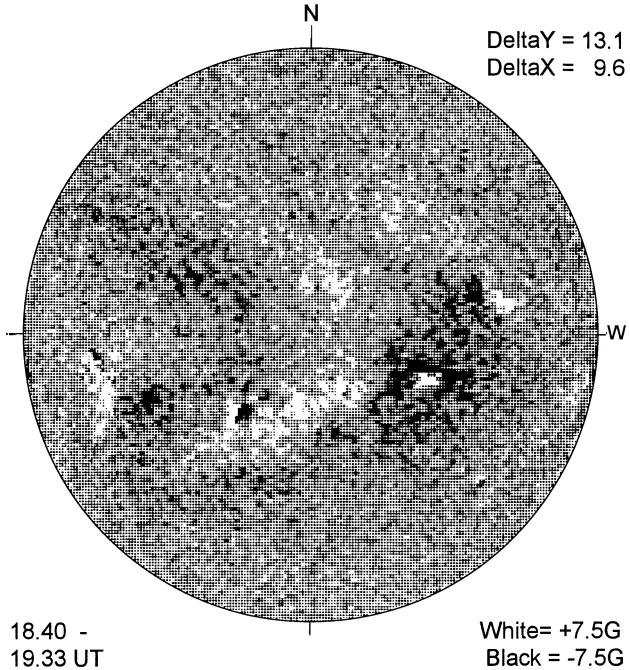

BIG BEAR-ALPHA

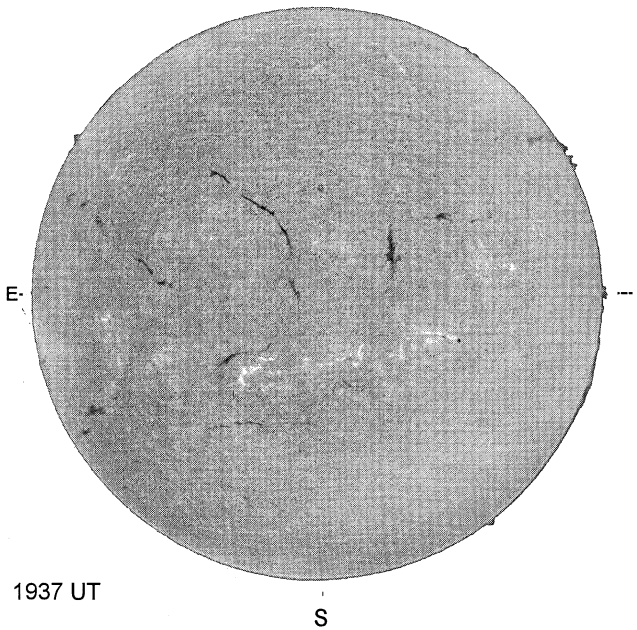

LEARMONTH SUNSPOTS

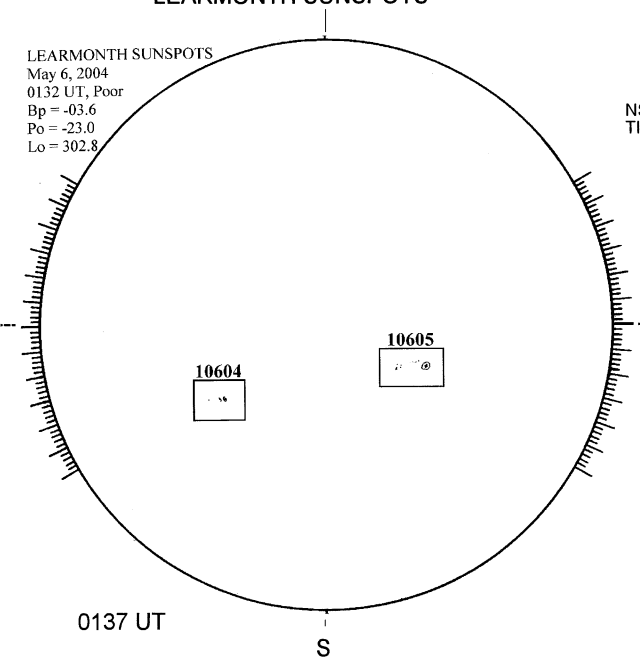
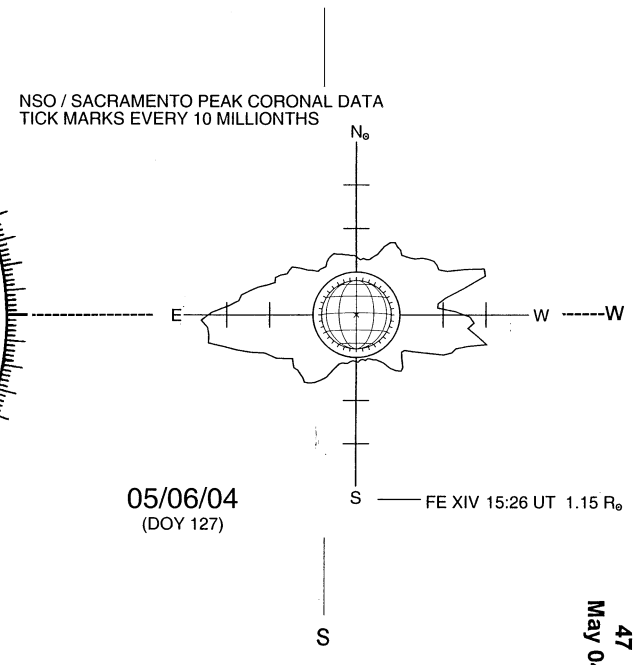
SACRAMENTO PEAK CORONA (1.15 Radii)----