MAY 5, 2004 (P= -23.32, Bo = -3.73, Lo = 316.85)

KITT PEAK MAGNETOGRAM--SOLIS

854.2 nm

Bright = +
Dark = -

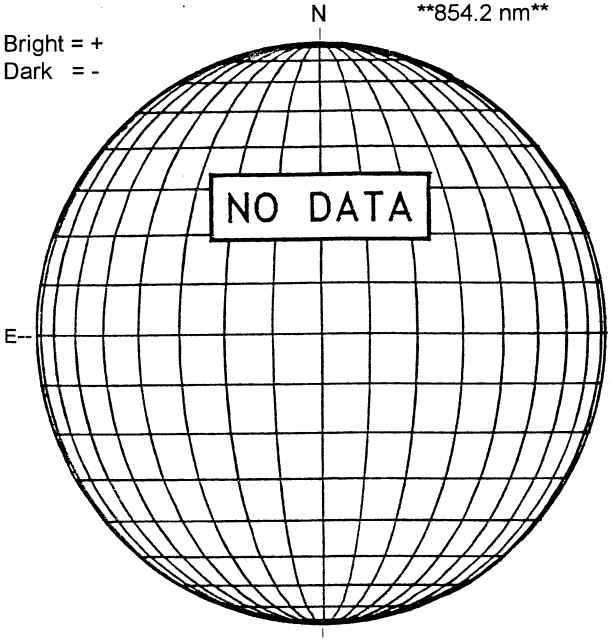

STANFORD MAGNETOGRAM

Solid = +
Dashed = -

1936 UT

MT. WILSON MAGNETOGRAM

DeltaY = 13.1
DeltaX = 9.6

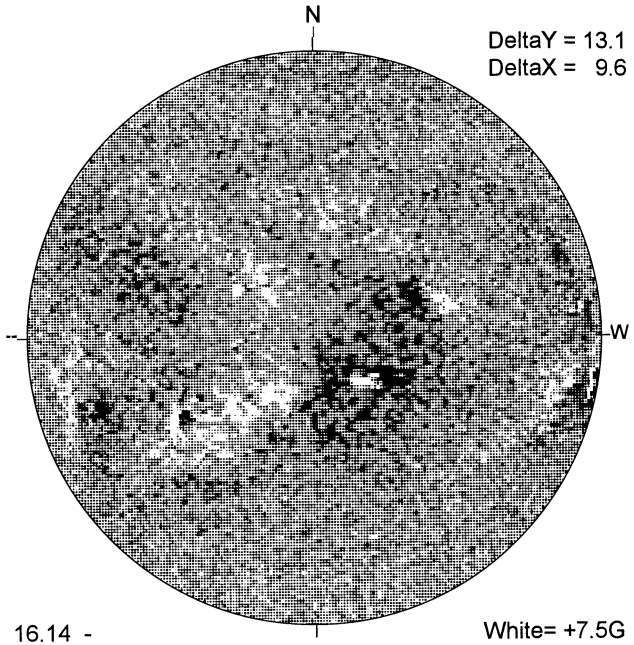

16.14 -
17.07 UT

White= +7.5G
Black = -7.5G

BIG BEAR H-ALPHA

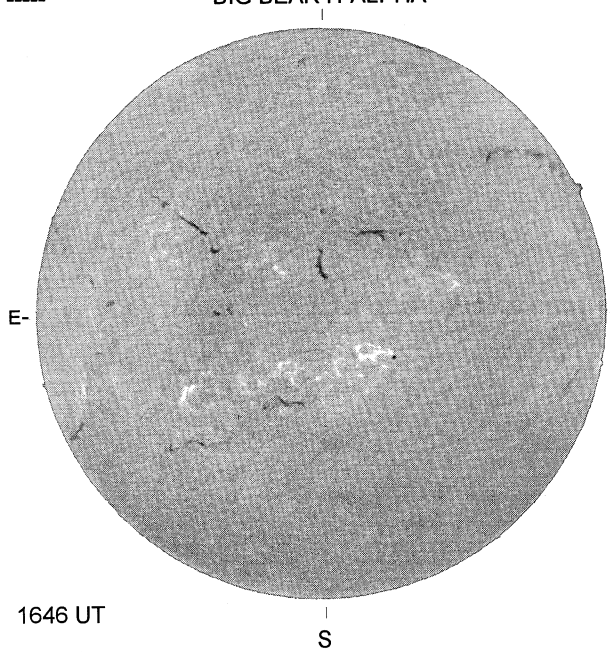

1646 UT

LEARMONTH SUNSPOTS

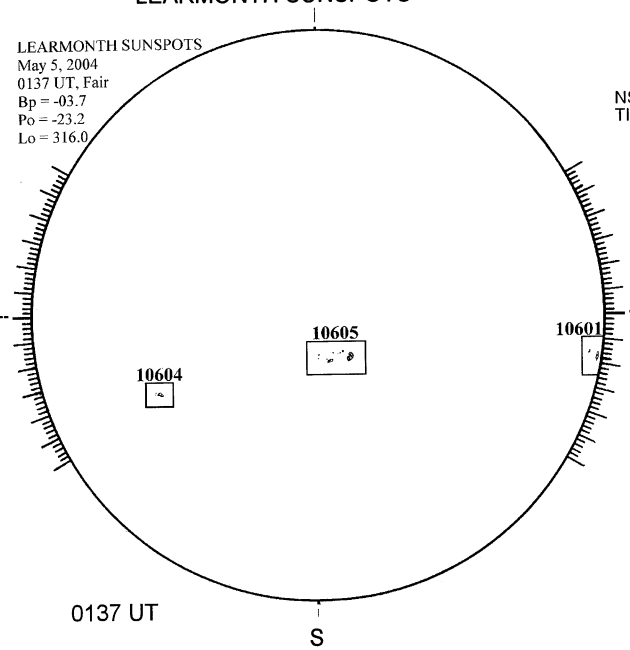

0137 UT

SACRAMENTO PEAK CORONA (1.15 Radii)----

NSO / SACRAMENTO PEAK CORONAL DATA
TICK MARKS EVERY 10 MILLIONTHS

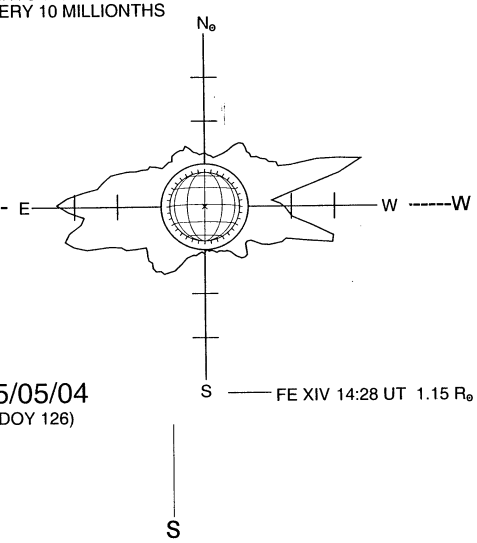

05/05/04
(DOY 126)

FE XIV 14:28 UT 1.15 R⊙