MAY 4, 2004 (P= -23.52, Bo = -3.83, Lo = 330.06)

KITT PEAK MAGNETOGRAM--SOLIS

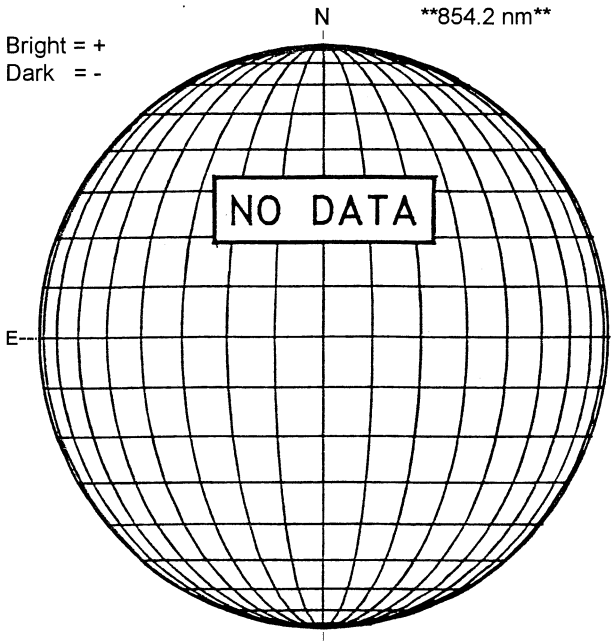

STANFORD MAGNETOGRAM

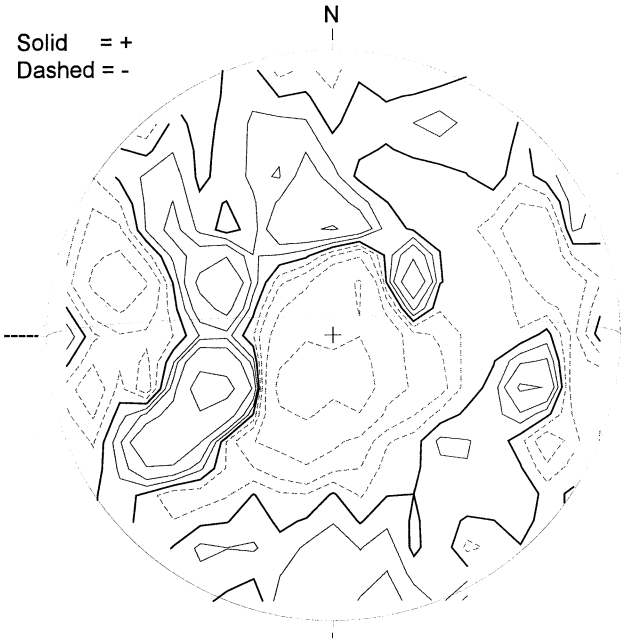

MT. WILSON MAGNETOGRAM

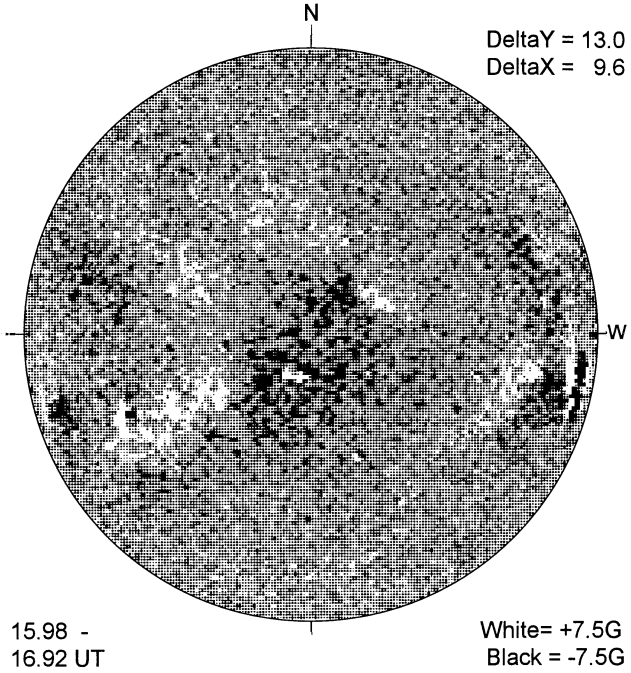

BIG BEAR H-ALPHA

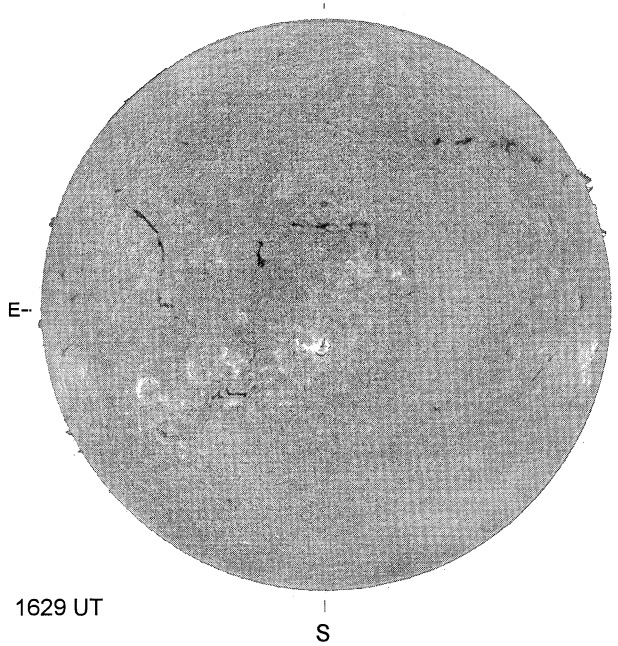

LEARMONTH SUNSPOTS

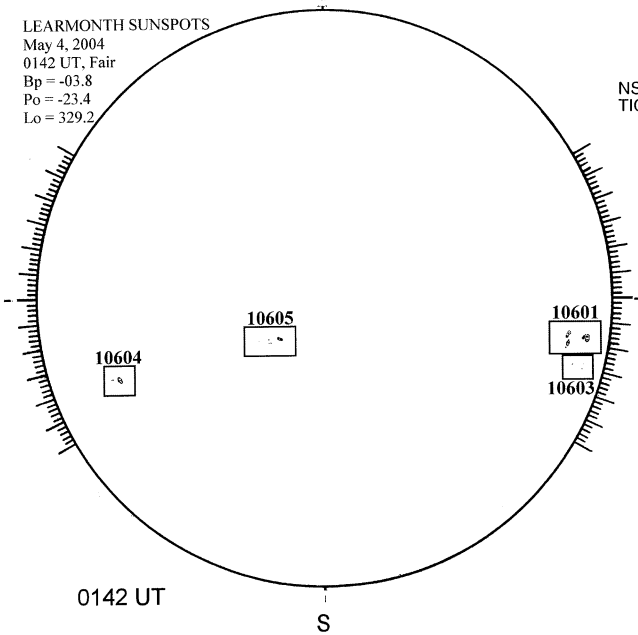
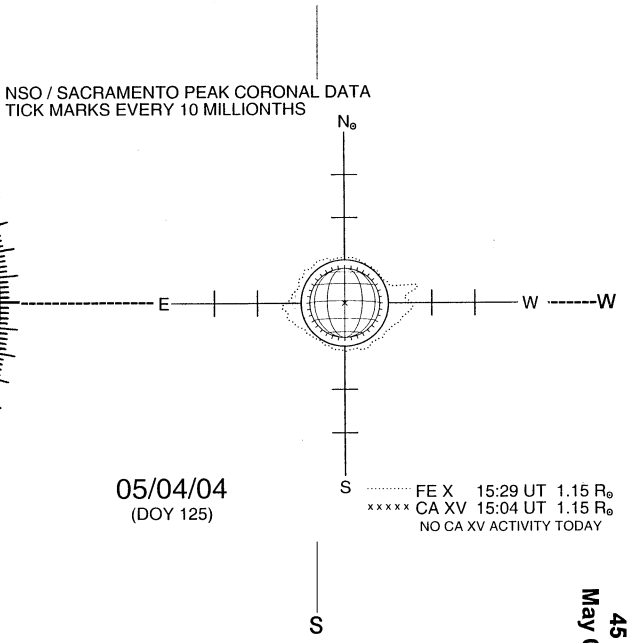
SACRAMENTO PEAK CORONA (1.15 Radii)----