MAY 3, 2004 (P= -23.72, Bo = -3.93, Lo = 343.28)

KITT PEAK MAGNETOGRAM--SOLIS

N

854.2 nm

Bright = +
Dark = -

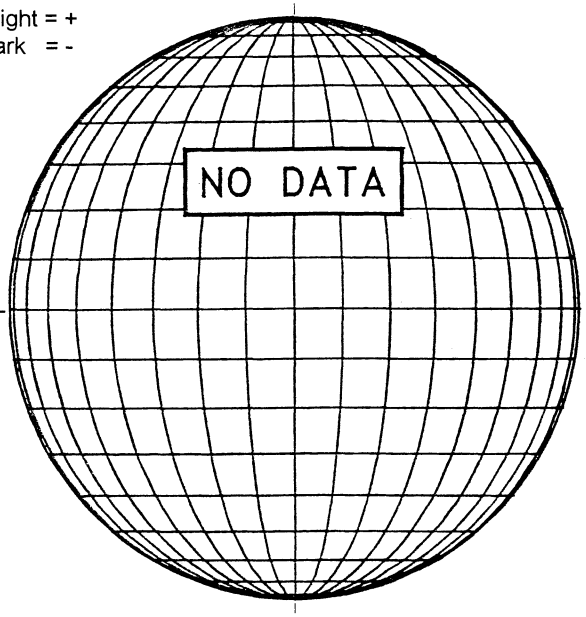

E--

STANFORD MAGNETOGRAM

N

Solid = +
Dashed = -

2109 UT

MT. WILSON MAGNETOGRAM

N

DeltaY = 13.1
DeltaX = 9.6

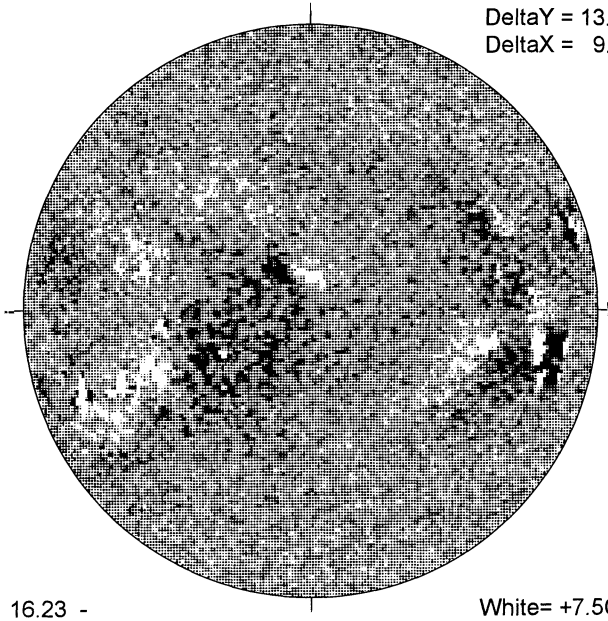

-W

16.23 -
17.17 UT

White= +7.5G
Black = -7.5G

BIG BEAR H-ALPHA

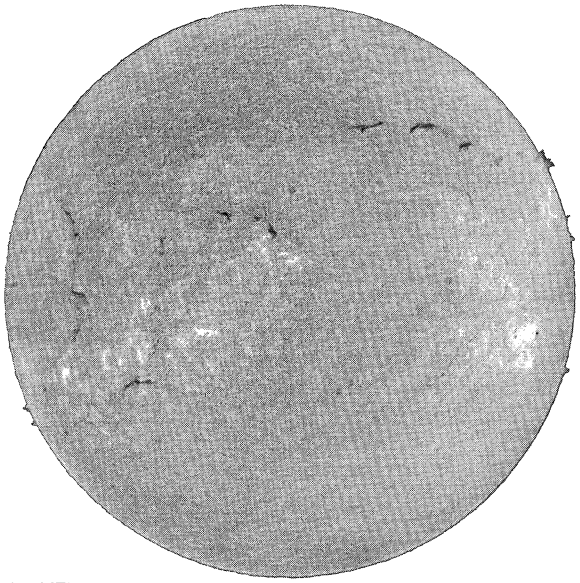

E-

1639 UT

S

LEARMONTH SUNSPOTS

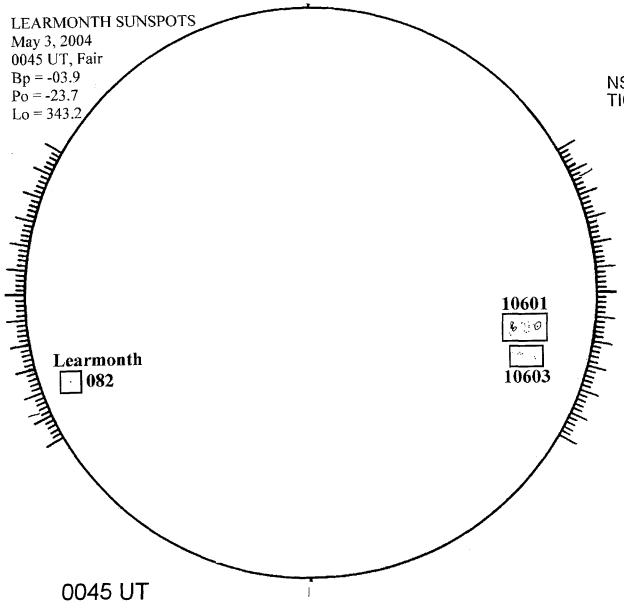

0045 UT

S

SACRAMENTO PEAK CORONA (1.15 Radii)----

NSO / SACRAMENTO PEAK CORONAL DATA
TICK MARKS EVERY 10 MILLIONTHS

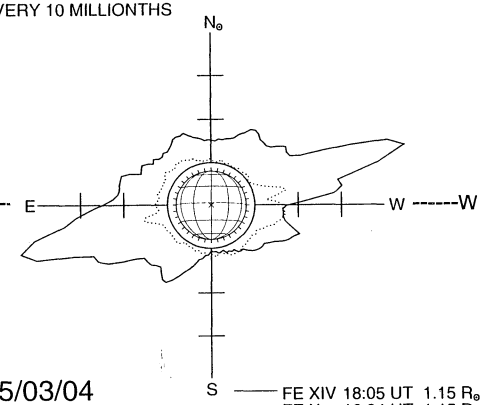

05/03/04
(DOY 124)

FE XIV 18:05 UT 1.15 R☉
FE X 16:04 UT 1.15 R☉
xxxxx CA XV 15:29 UT 1.15 R☉
NO CA XV ACTIVITY TODAY

S