APRIL 30, 2004 (P= -24.27, Bo = -4.24, Lo = 22.93)

KITT PEAK MAGNETOGRAM—SOLIS

854.2 nm

Bright = +
Dark = -

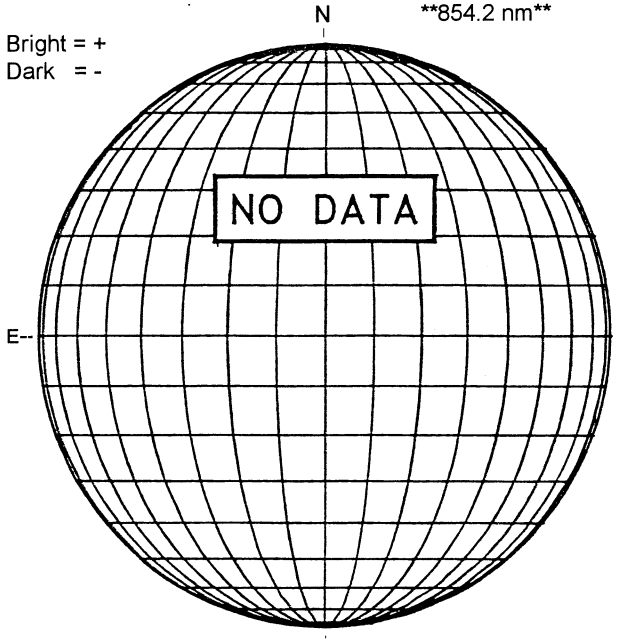

STANFORD MAGNETOGRAM

Solid = +
Dashed = -

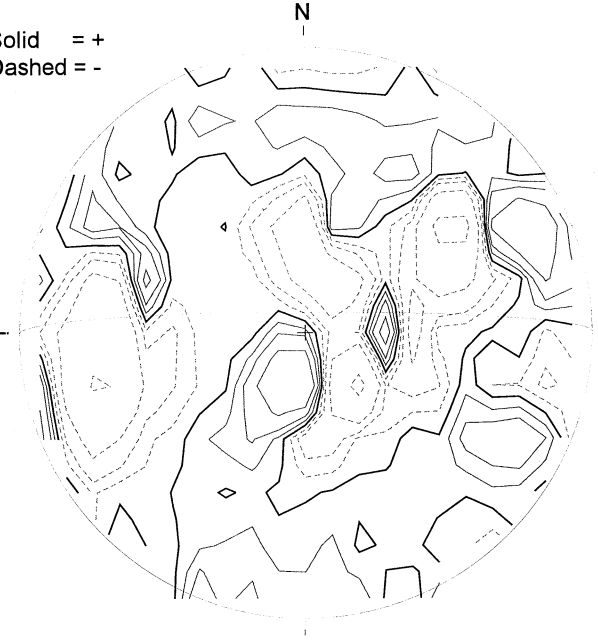

2153 UT

MT. WILSON MAGNETOGRAM

DeltaY = 13.1
DeltaX = 9.6

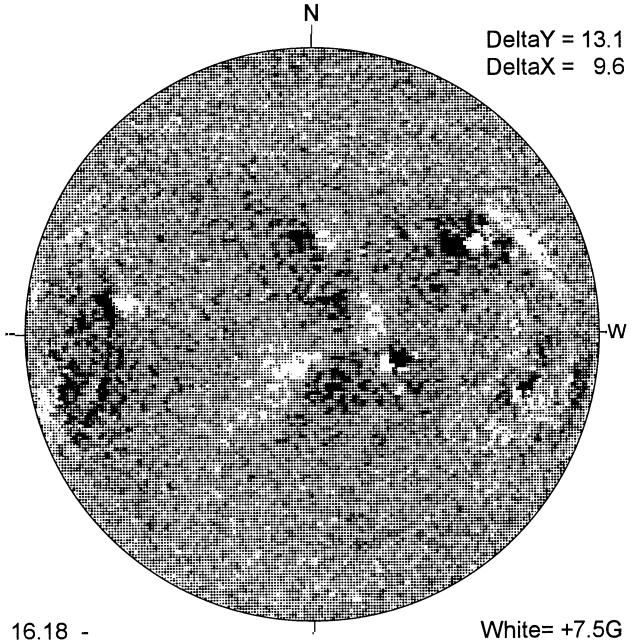

16.18 -
17.12 UT

White= +7.5G
Black = -7.5G

BIG BEAR H-ALPHA

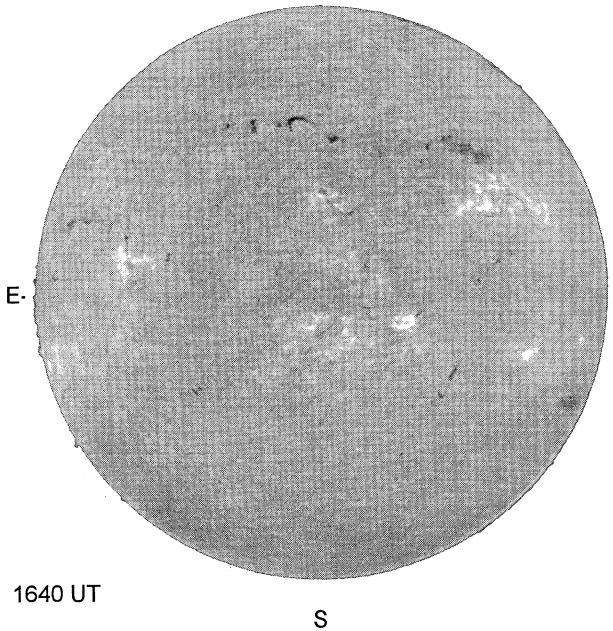

1640 UT

LEARMONTH SUNSPOTS

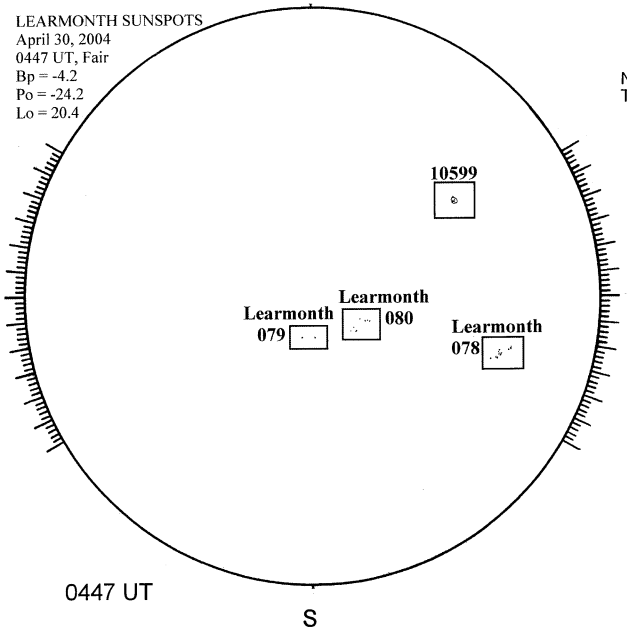

0447 UT

SACRAMENTO PEAK CORONA (1.15 Radii)----

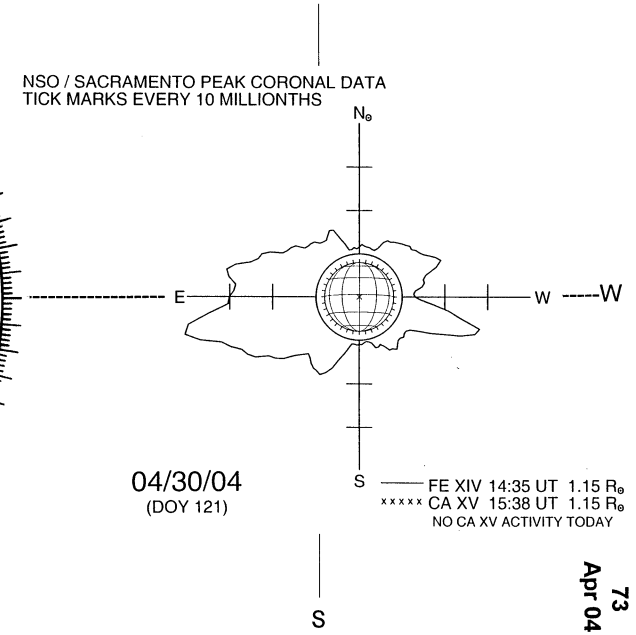

04/30/04
(DOY 121)