APRIL 29, 2004 (P= -24.43, Bo = -4.34, Lo = 36.15)

KITT PEAK MAGNETOGRAM--SOLIS

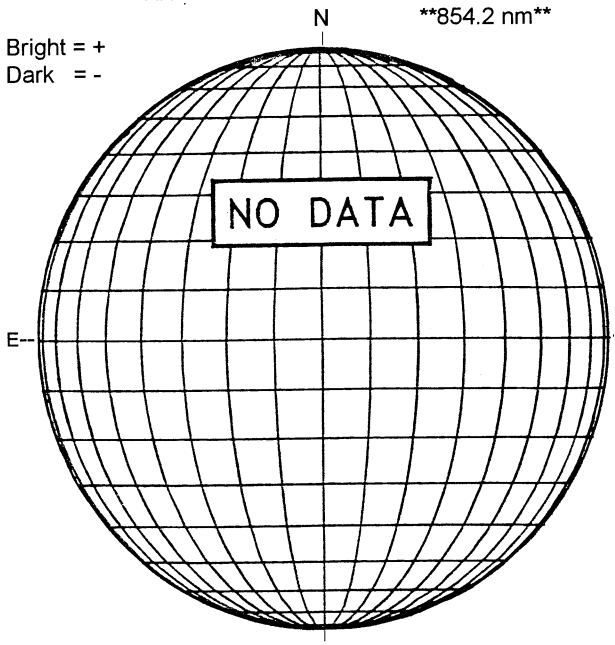

STANFORD MAGNETOGRAM

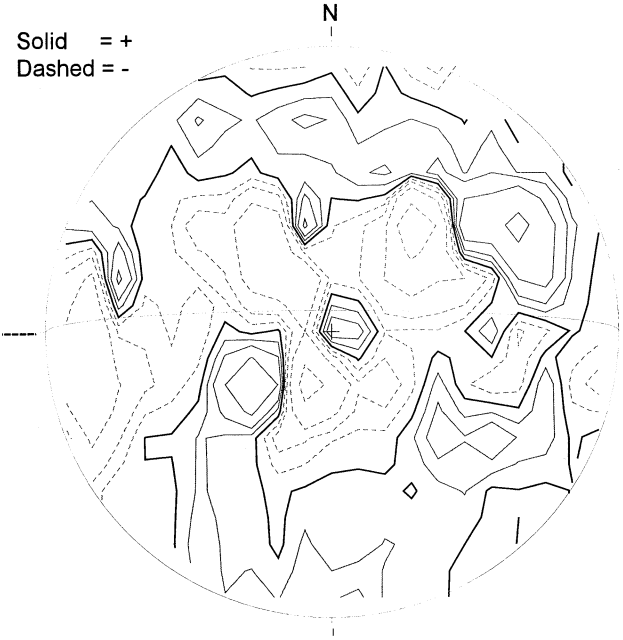

2154 UT

MT. WILSON MAGNETOGRAM

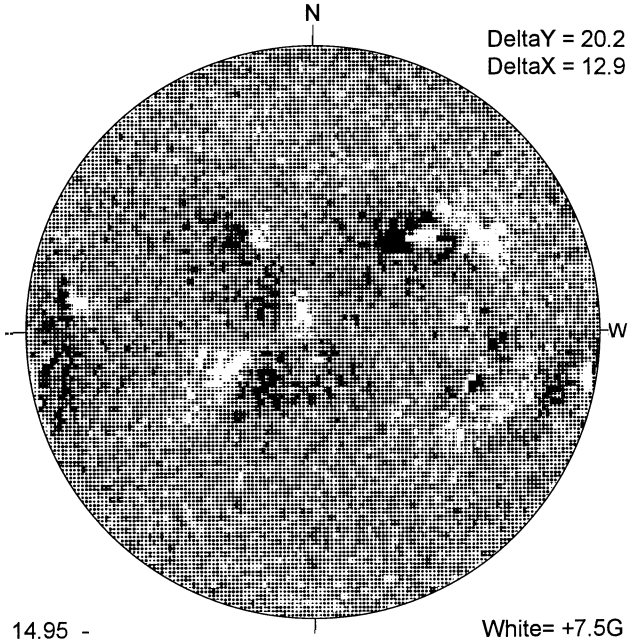

14.95 -
15.36 UT

White= +7.5G
Black = -7.5G

BIG BEAR H-ALPHA

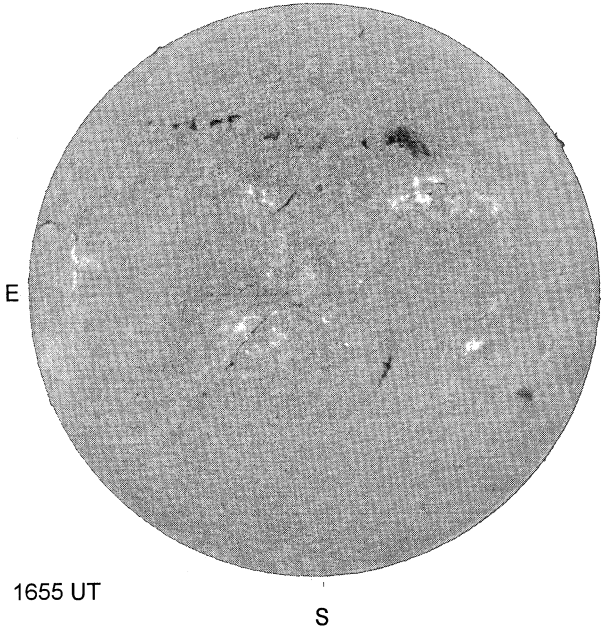

1655 UT

LEARMONTH SUNSPOTS

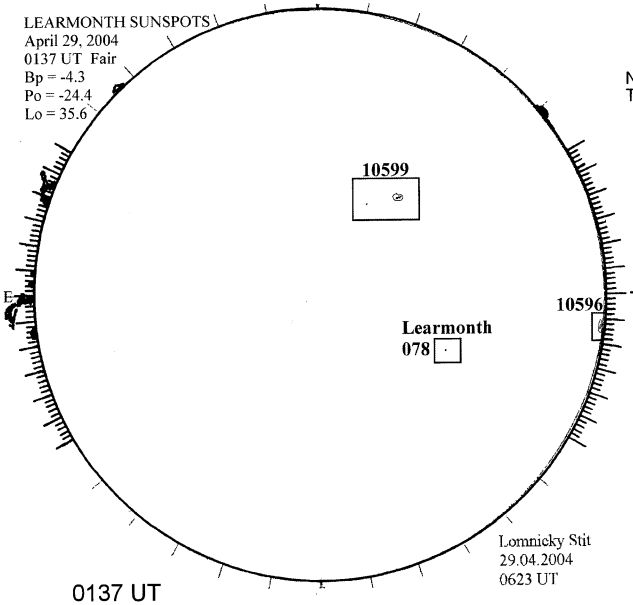

0137 UT
0623 UT LOMN Prom S

SACRAMENTO PEAK CORONA (1.15 Radii)----

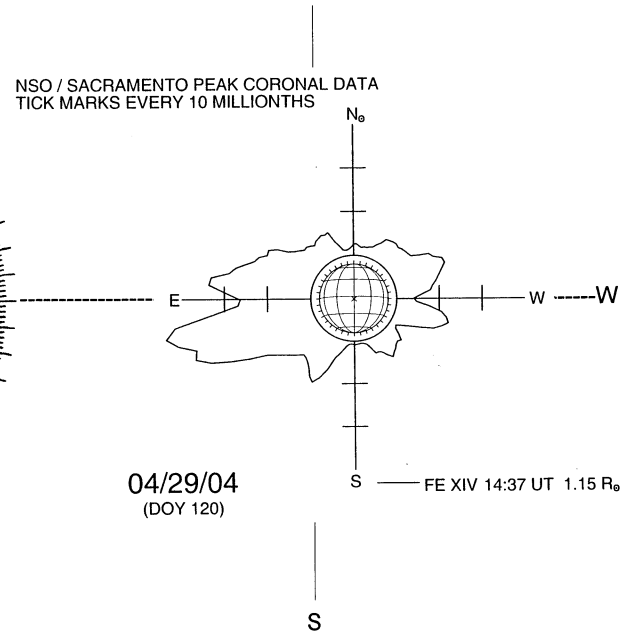

04/29/04
(DOY 120)