APRIL 28, 2004 (P= -24.60, Bo = -4.43, Lo = 49.37)

KITT PEAK MAGNETOGRAM--SOLIS

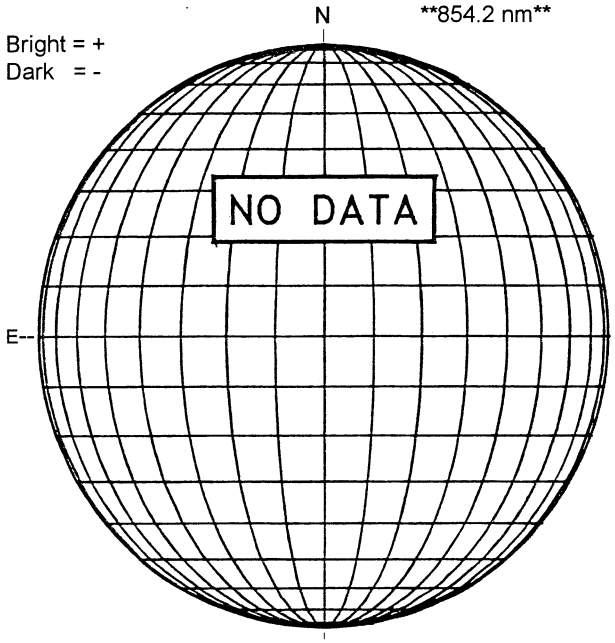

STANFORD MAGNETOGRAM

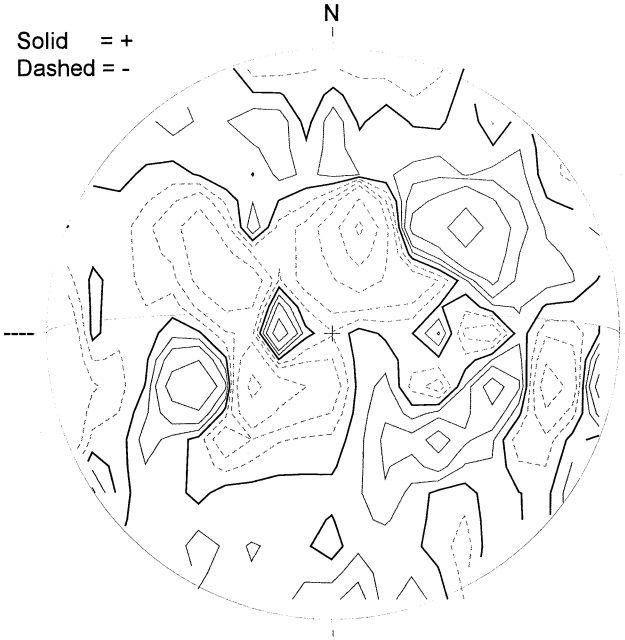

MT. WILSON MAGNETOGRAM

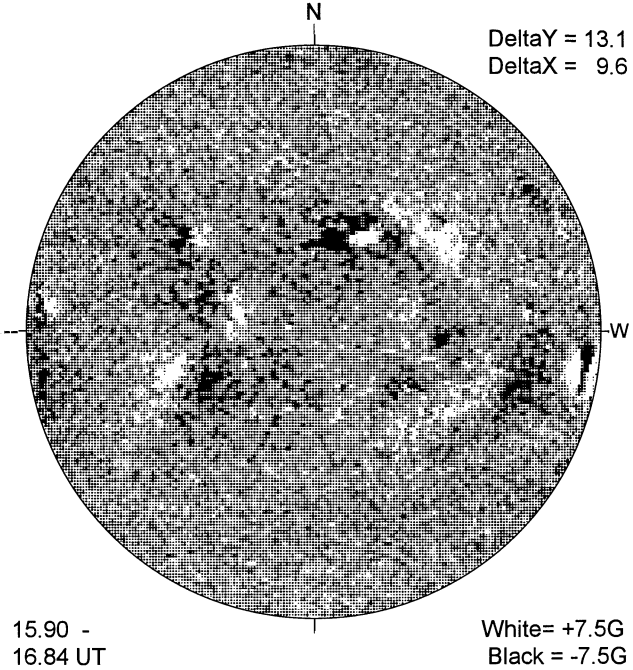

BIG BEAR H-ALPHA

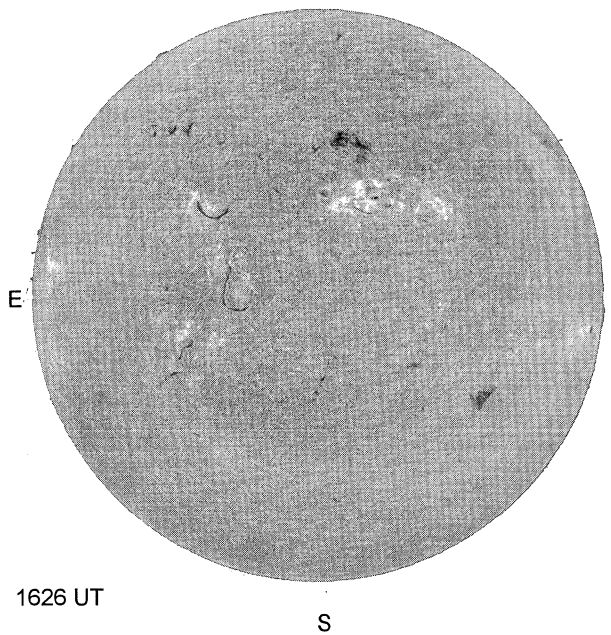

LEARMONTH SUNSPOTS

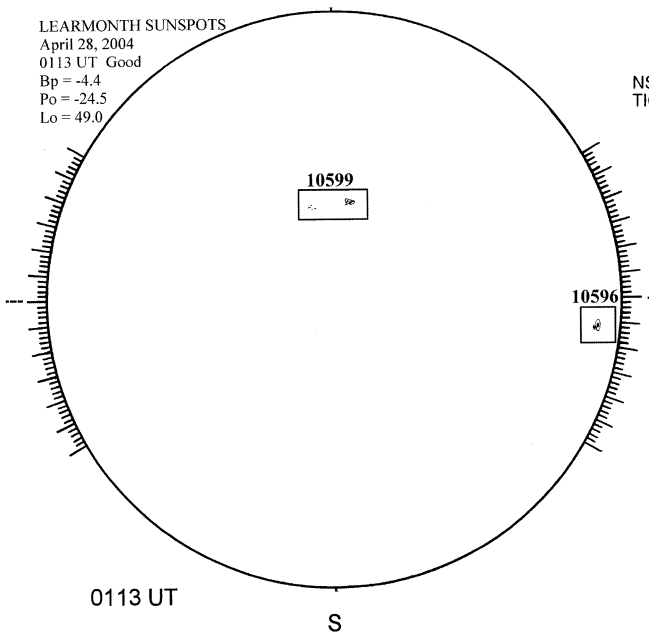
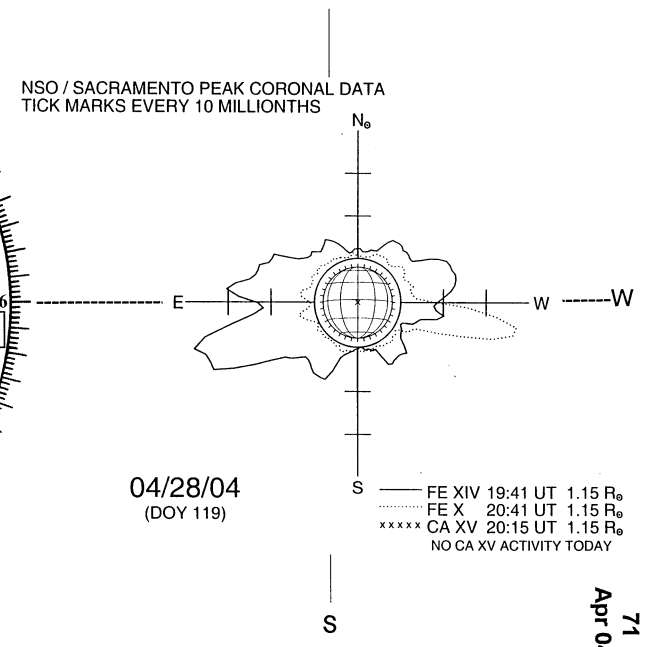
SACRAMENTO PEAK CORONA (1.15 Radii)----