APRIL 23, 2004 (P= -25.29, Bo = -4.90, Lo = 115.43)

KITT PEAK MAGNETOGRAM--SOLIS

854.2 nm

Bright = +
Dark = -

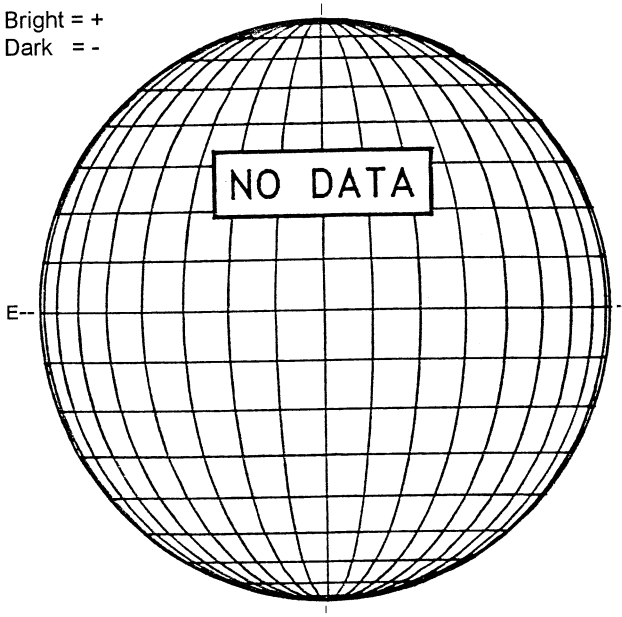

STANFORD MAGNETOGRAM

Solid = +
Dashed = -

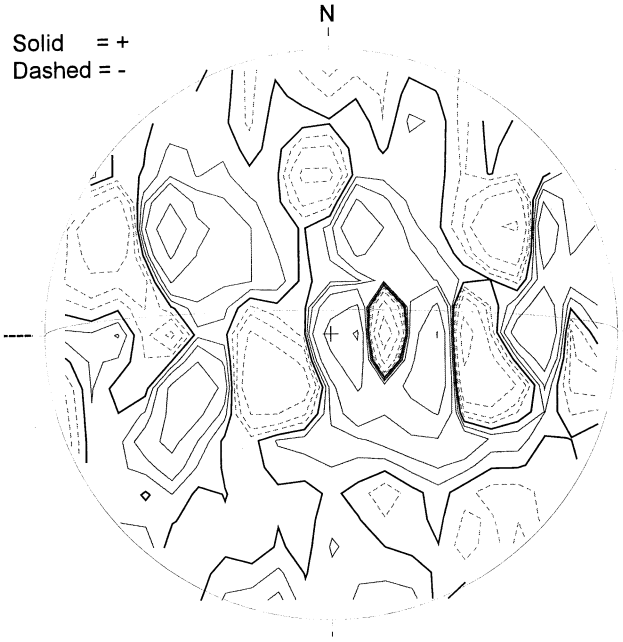

2235 UT

MT. WILSON MAGNETOGRAM

DeltaY = 13.1
DeltaX = 9.6

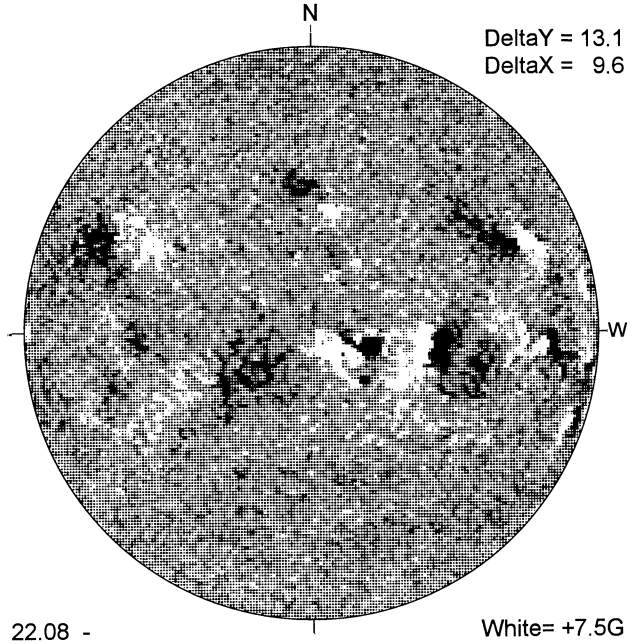

22.08 -
23.01 UT

White= +7.5G
Black = -7.5G

BIG BEAR H-ALPHA

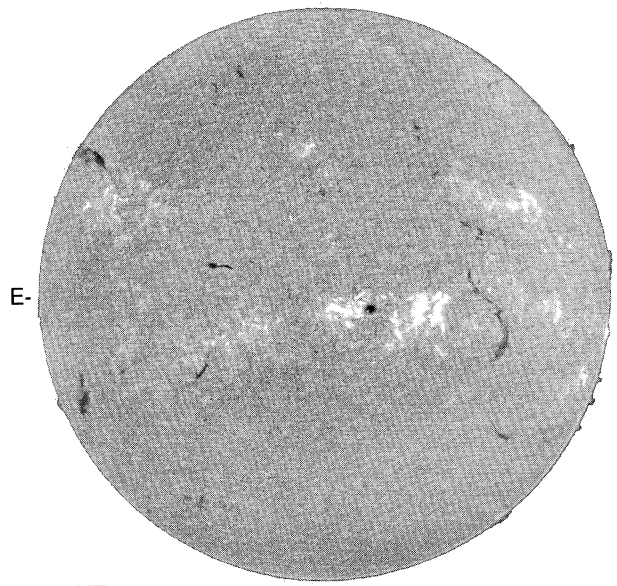

1641 UT

S

HOLLOMAN SUNSPOTS

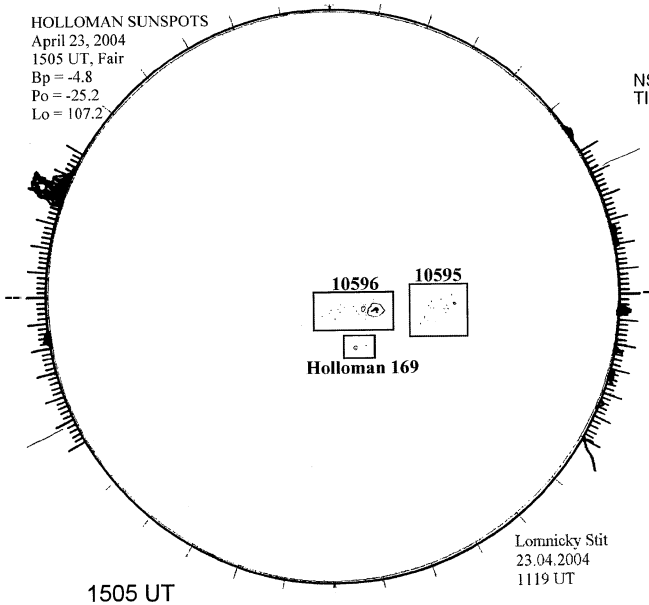

1505 UT
1119 UT LOMN Prom S

SACRAMENTO PEAK CORONA (1.15 Radii)----

NSO / SACRAMENTO PEAK CORONAL DATA
TICK MARKS EVERY 10 MILLIONTHS

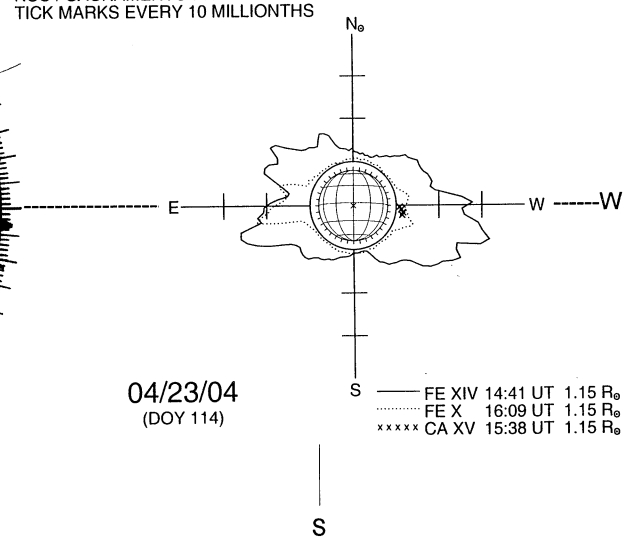

04/23/04
(DOY 114)

S