APRIL 22, 2004 (P= -25.41, Bo = -4.99, Lo = 128.64)

KITT PEAK MAGNETOGRAM--SOLIS

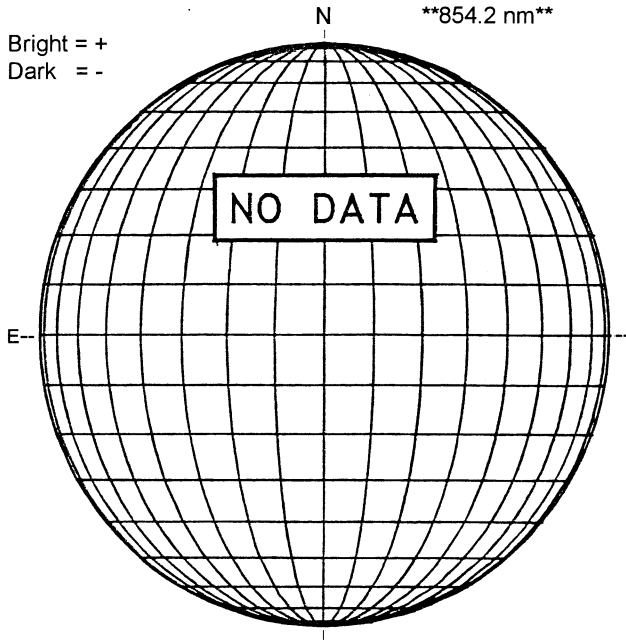

STANFORD MAGNETOGRAM

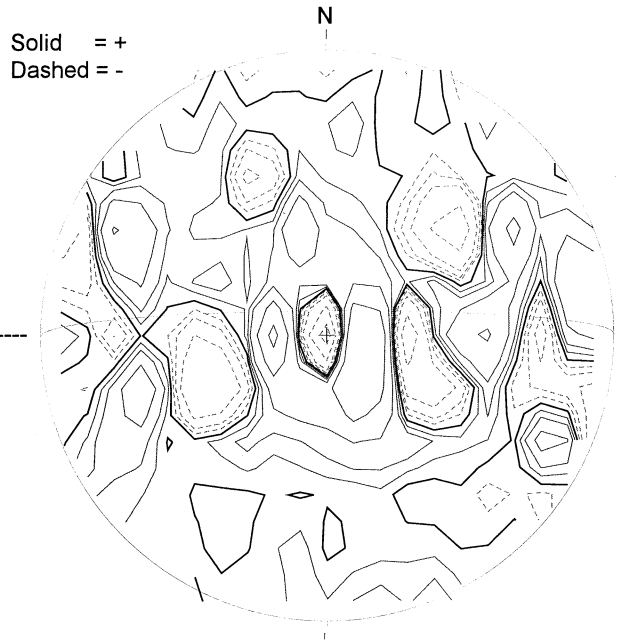

2218 UT

MT. WILSON MAGNETOGRAM

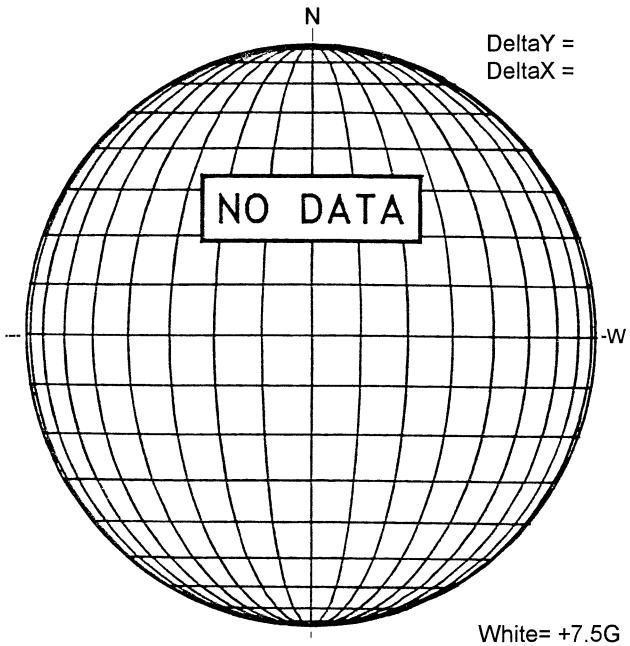

BIG BEAR H-ALPHA

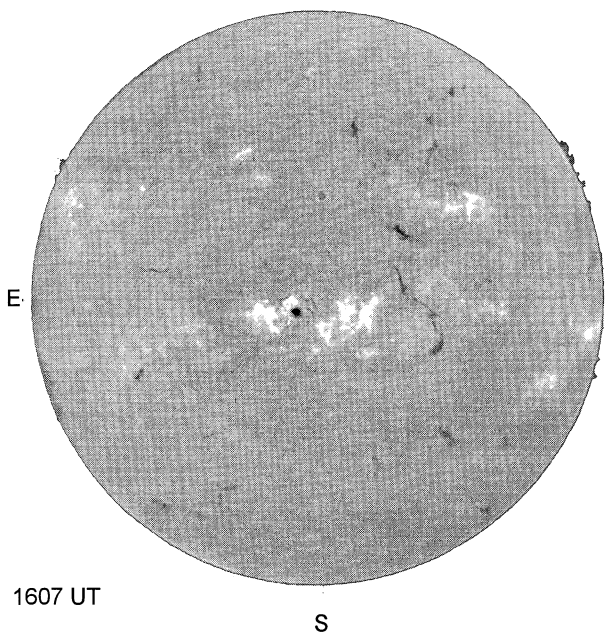

HOLLOMAN SUNSPOT

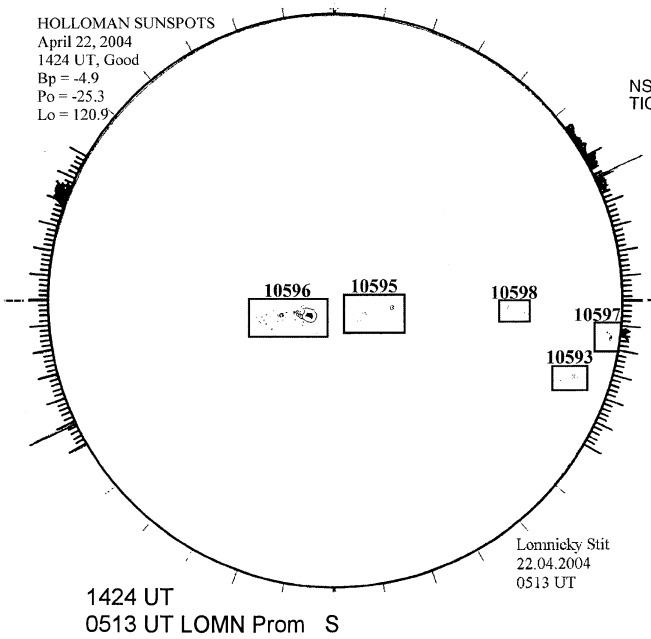
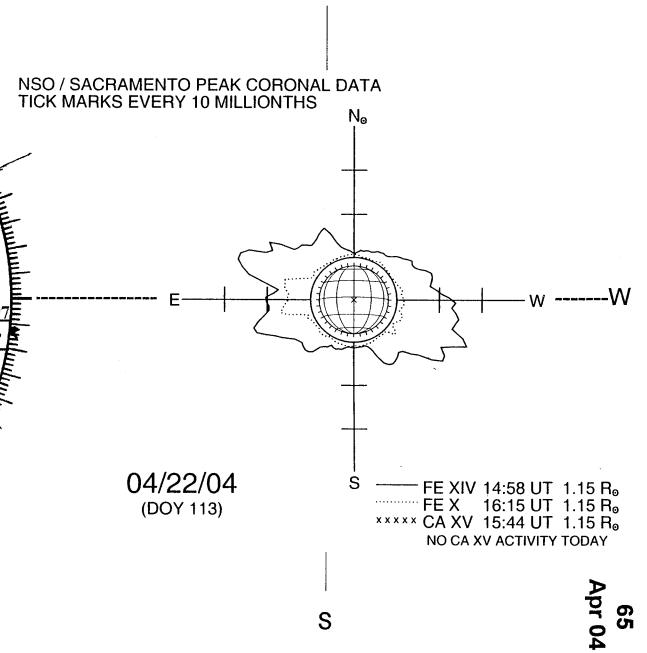
SACRAMENTO PEAK CORONA (1.15 Radii)----