APRIL 21, 2004 (P= -25.52, Bo = -5.08, Lo = 141.84)

KITT PEAK MAGNETOGRAM--SOLIS

854.2 nm

Bright = +
Dark = -

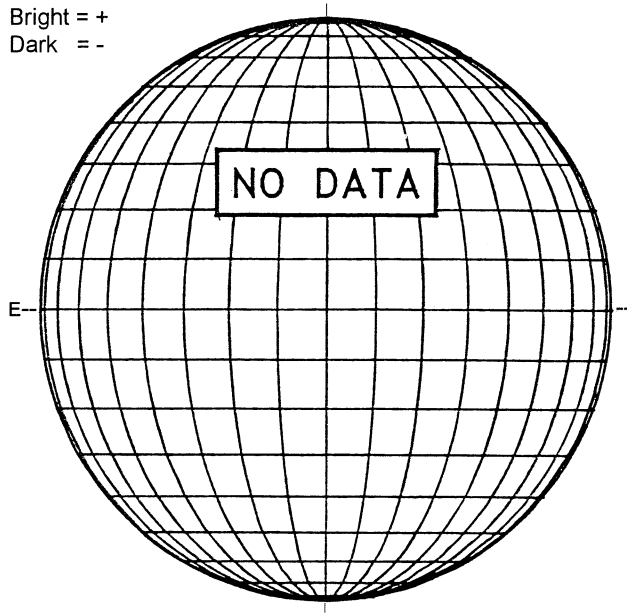

STANFORD MAGNETOGRAM

Solid = +
Dashed = -

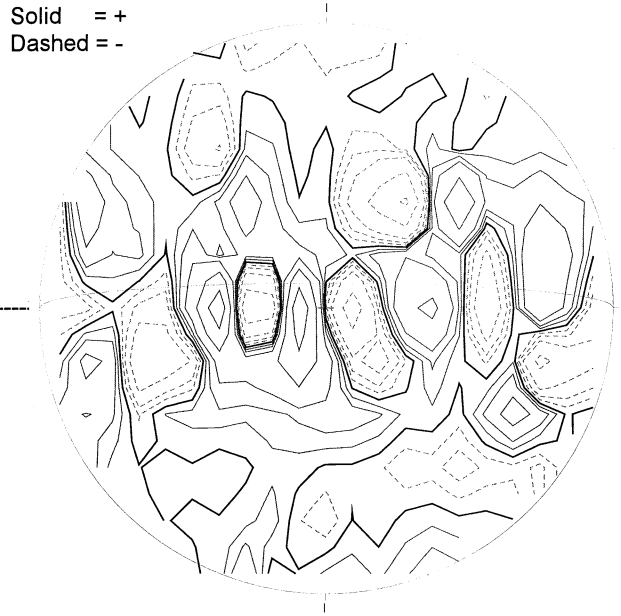

2350 UT

MT. WILSON MAGNETOGRAM

DeltaY = 13.1
DeltaX = 9.6

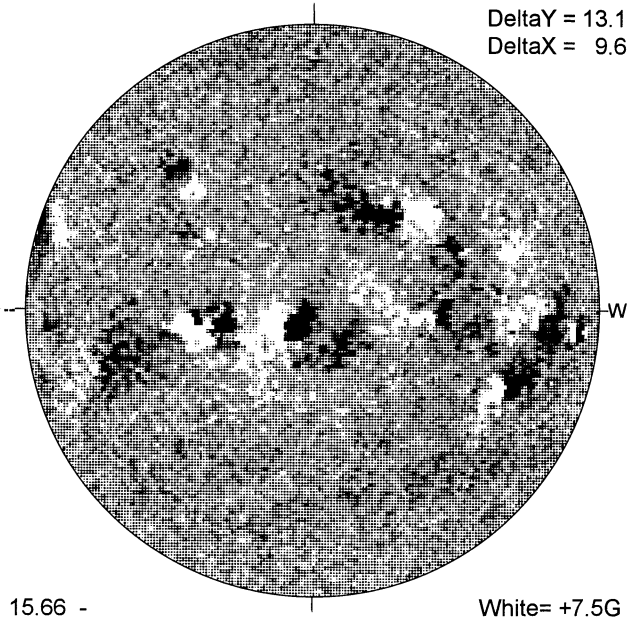

15.66 -
16.60 UT

White= +7.5G
Black = -7.5G

BIG BEAR H-ALPHA

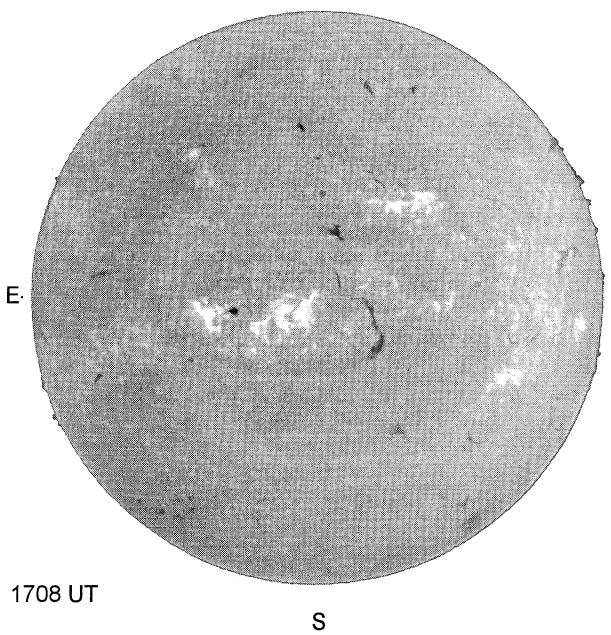

1708 UT

HOLLOMAN SUNSPOTS

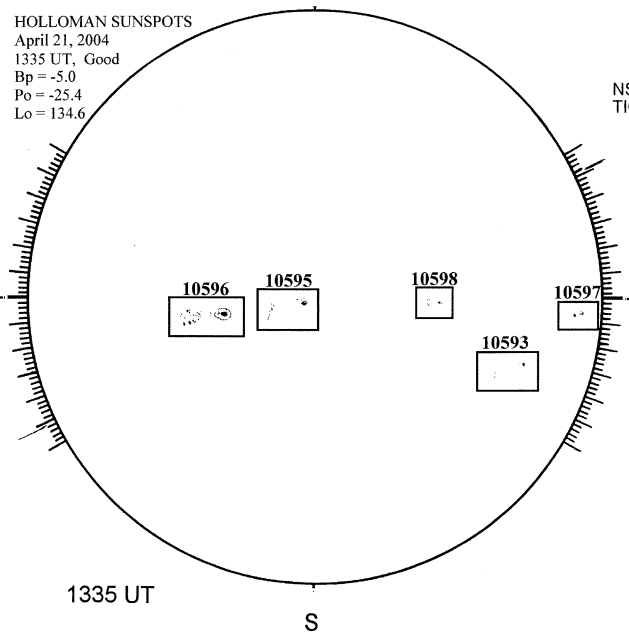

1335 UT

SACRAMENTO PEAK CORONA (1.15 Radii)

NSO / SACRAMENTO PEAK CORONAL DATA
TICK MARKS EVERY 10 MILLIONTHS

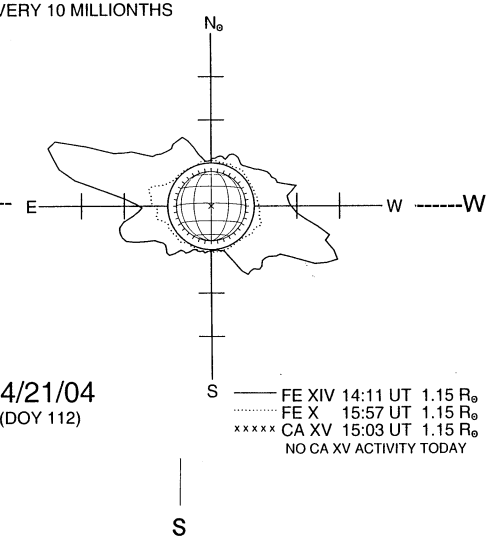

04/21/04
(DOY 112)