APRIL 7, 2004 (P= -26.29, Bo = -6.17, Lo = 326.69)

KITT PEAK MAGNETOGRAM--SOLIS

854.2 nm

Bright = +
Dark = -

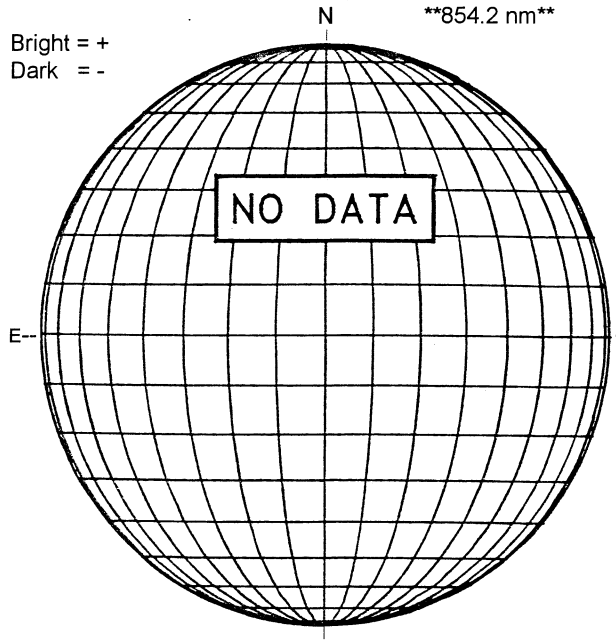

STANFORD MAGNETOGRAM

Solid = +
Dashed = -

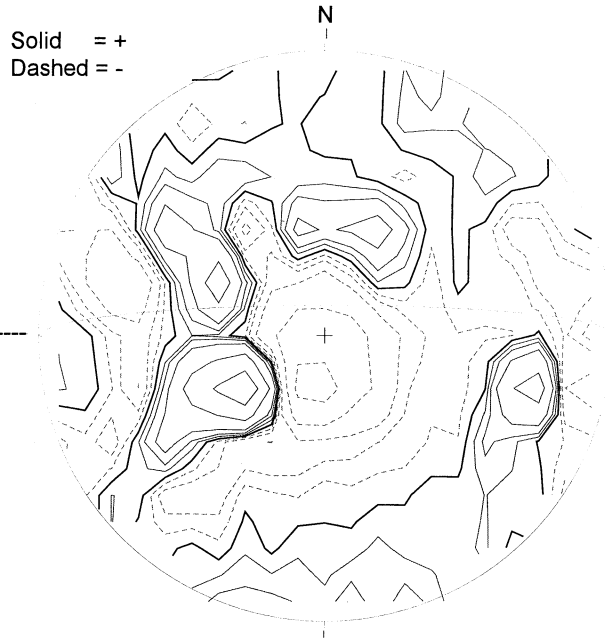

2134 UT

MT. WILSON MAGNETOGRAM

DeltaY = 13.1
DeltaX = 9.6

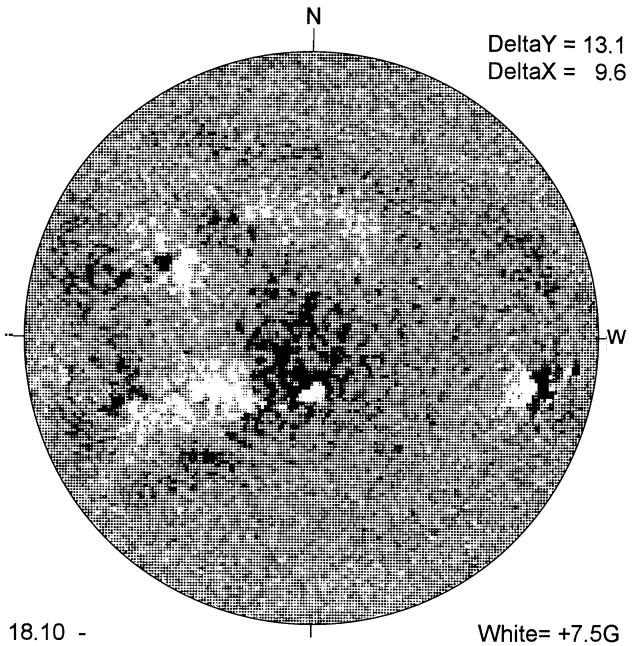

18.10 -
19.04 UT

White= +7.5G
Black = -7.5G

BIG BEAR H-ALPHA

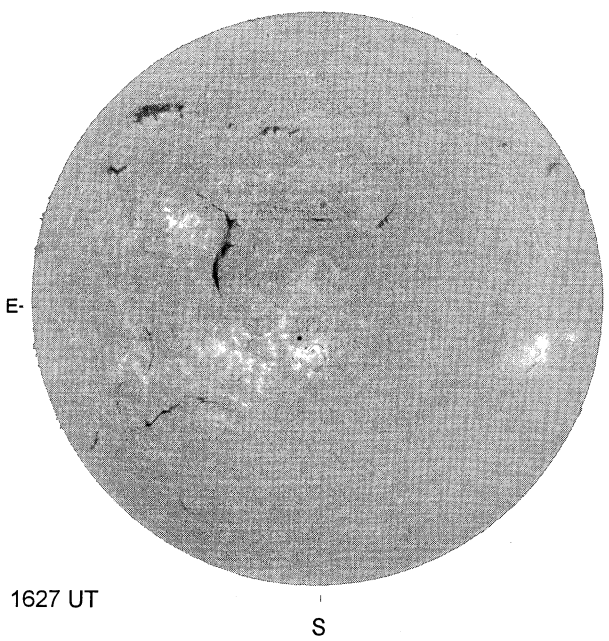

1627 UT

HOLLOMAN SUNSPOTS

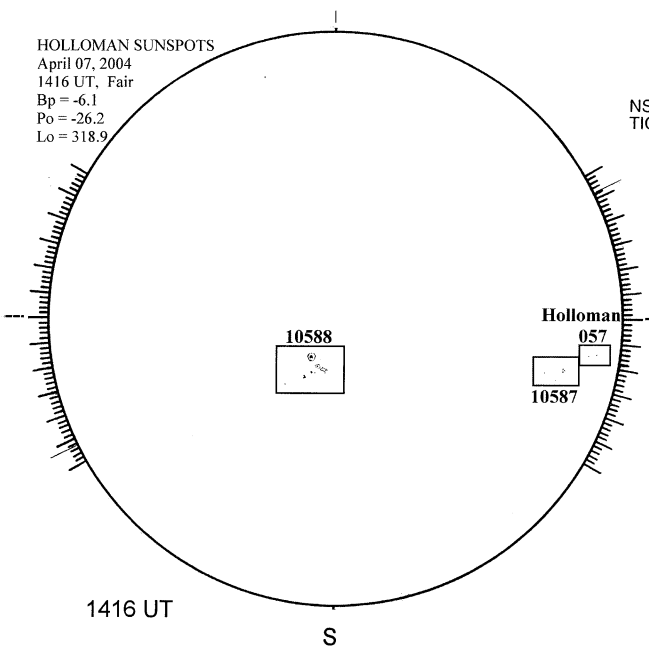

1416 UT

SACRAMENTO PEAK CORONA (1.15 Radii)

NSO / SACRAMENTO PEAK CORONAL DATA
TICK MARKS EVERY 10 MILLIONTHS

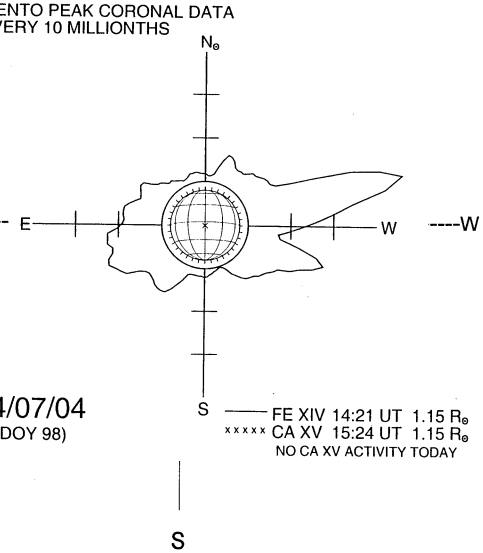

04/07/04
(DOY 98)

FE XIV 14:21 UT 1.15 R⊙
xxxxx CA XV 15:24 UT 1.15 R⊙
NO CA XV ACTIVITY TODAY