APRIL 1, 2004 (P= -26.18, Bo = -6.53, Lo = 45.86)

KITT PEAK MAGNETOGRAM--SOLIS

854.2 nm

Bright = +
Dark = -

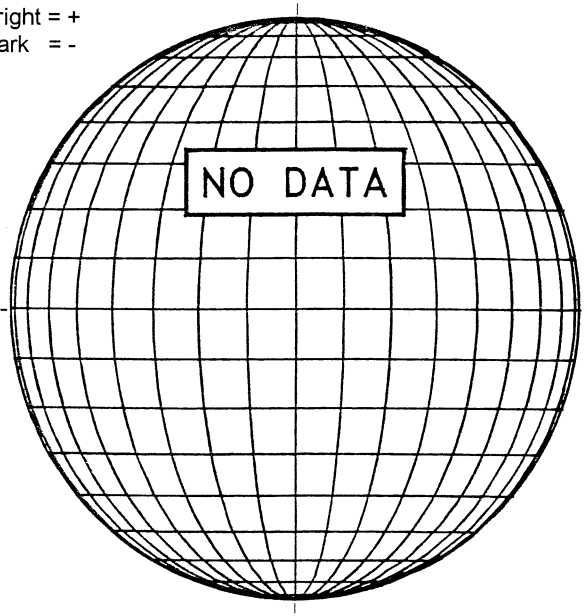

STANFORD MAGNETOGRAM

Solid = +
Dashed = -

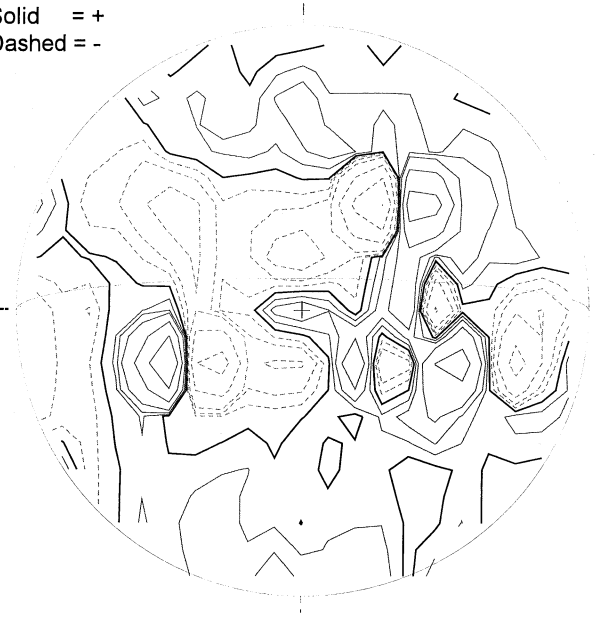

1850 UT

MT. WILSON MAGNETOGRAM

DeltaY = 13.1
DeltaX = 9.6

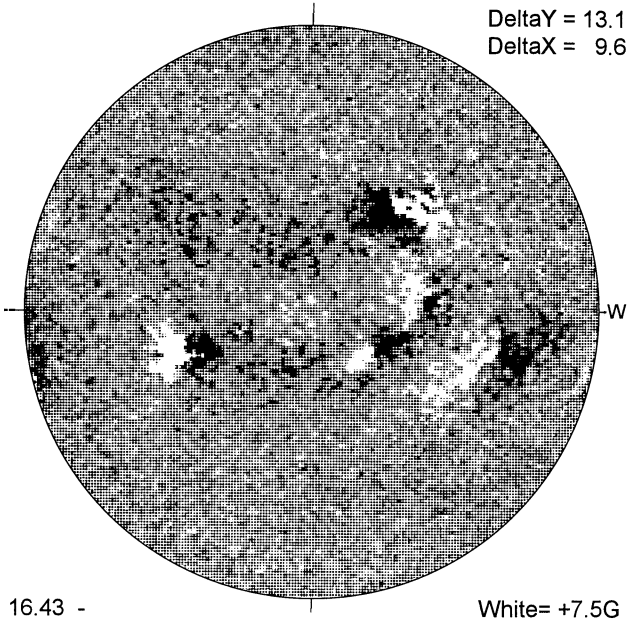

16.43 -
17.38 UT

White= +7.5G
Black = -7.5G

BIG BEAR H-ALPHA

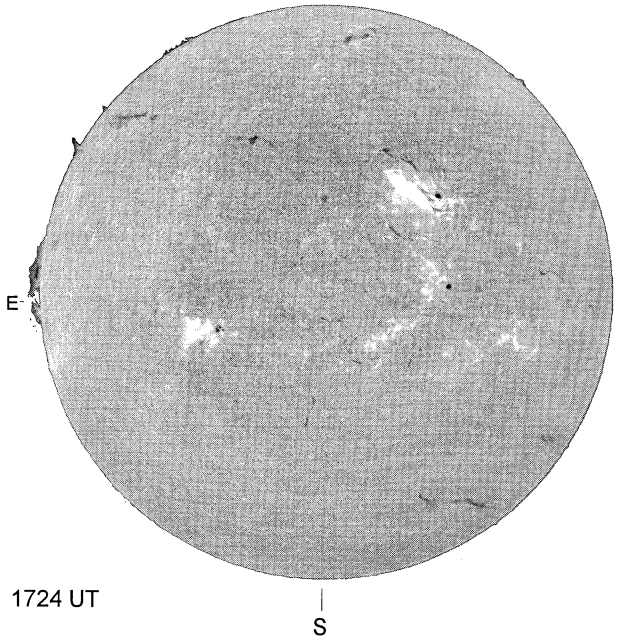

1724 UT

HOLLOMAN SUNSPOT

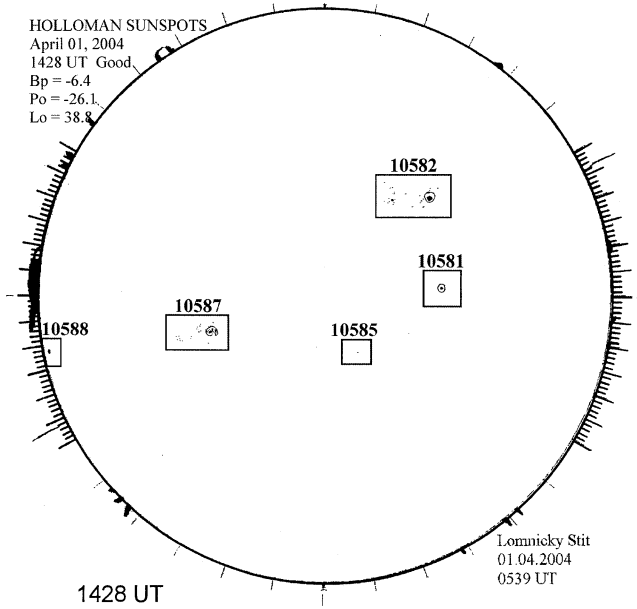

1428 UT
0539 UT LOMN Prom

LOMNICKY PEAK CORONA (1.04 Radii)

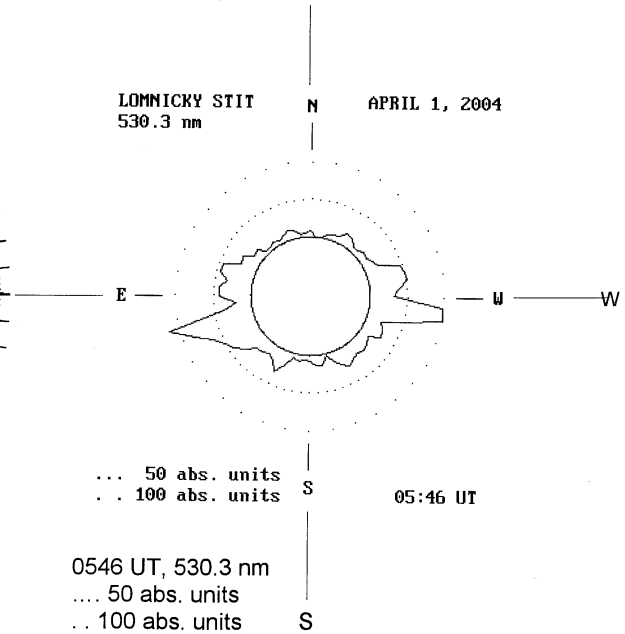

0546 UT, 530.3 nm
.... 50 abs. units
. . 100 abs. units