MARCH 30, 2004 (P= -26.09, Bo = -6.63, Lo = 72.24)

KITT PEAK MAGNETOGRAM—SOLIS

854.2 nm

Bright = +
Dark = -

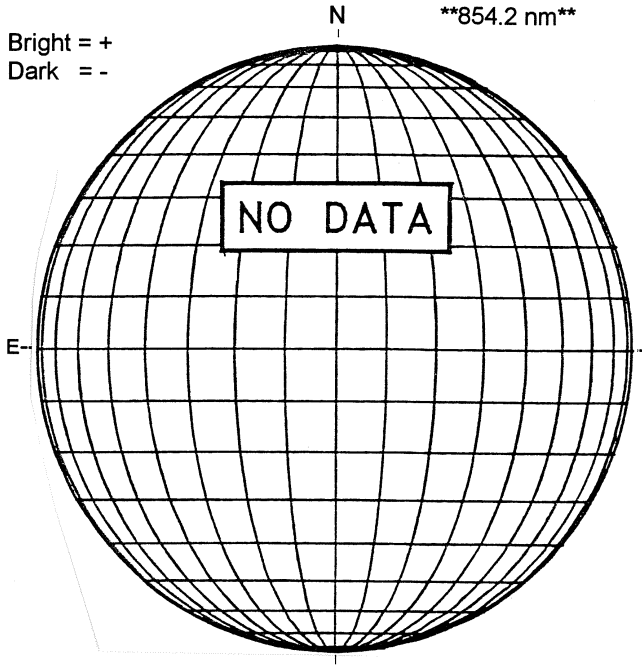

STANFORD MAGNETOGRAM

Solid = +
Dashed = -

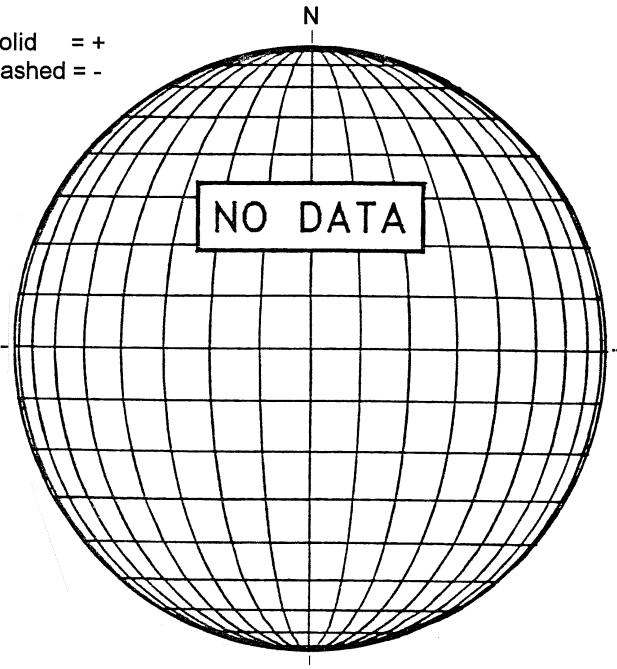

MT. WILSON MAGNETOGRAM

DeltaY =
DeltaX =

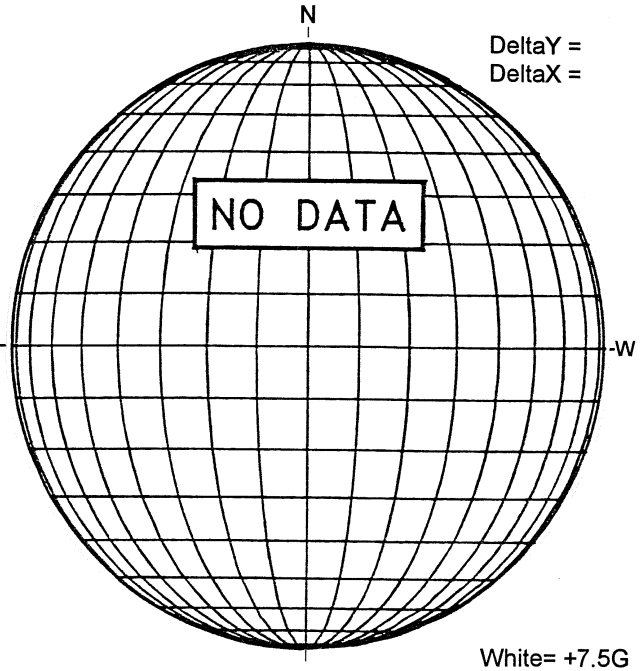

White= +7.5G
Black = -7.5G

BIG BEAR H-ALPHA

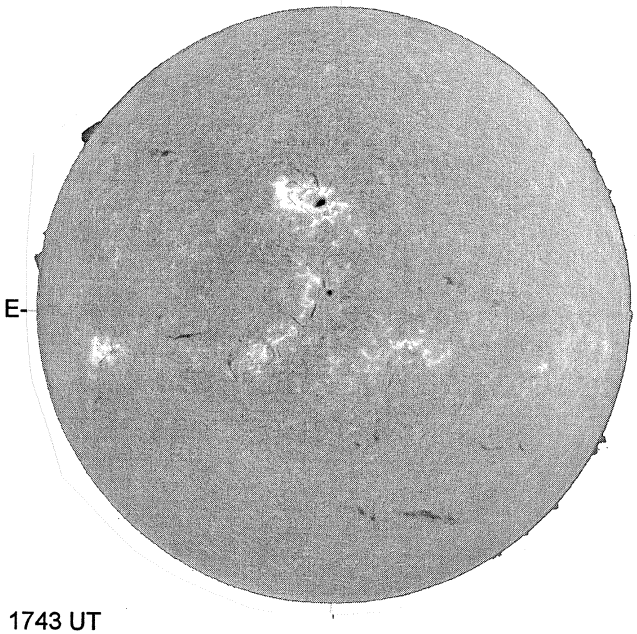

1743 UT

S

HOLLOMAN SUNSPOT

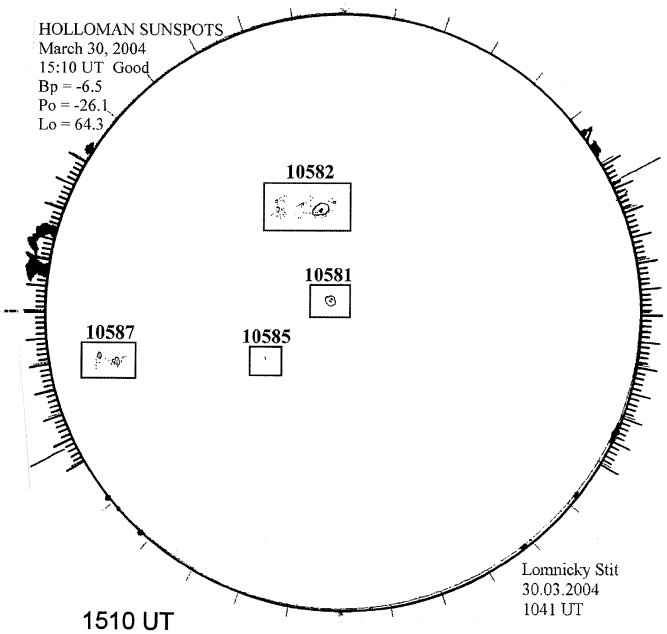

1510 UT
1041 UT LOMN Prom S

SACRAMENTO PEAK CORONA (1.15 Radii)----

NSO / SACRAMENTO PEAK CORONAL DATA
TICK MARKS EVERY 10 MILLIONTHS

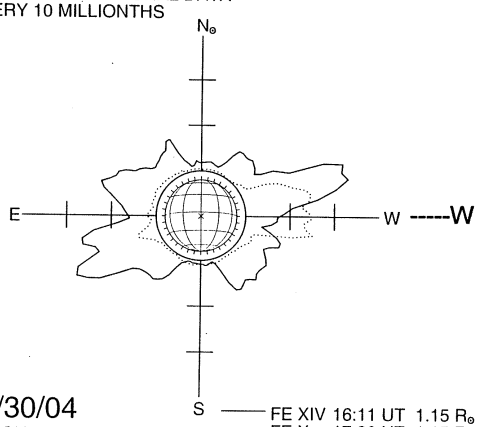

03/30/04
(DOY 90)

FE XIV 16:11 UT 1.15 R⊙
FE X 17:30 UT 1.15 R⊙
xxxxx CA XV 16:46 UT 1.15 R⊙
NO CA XV ACTIVITY TODAY

S

73
Mar 04