MARCH 24, 2004 (P= -25.63, Bo = -6.90, Lo = 151.38)

KITT PEAK MAGNETOGRAM--SOLIS

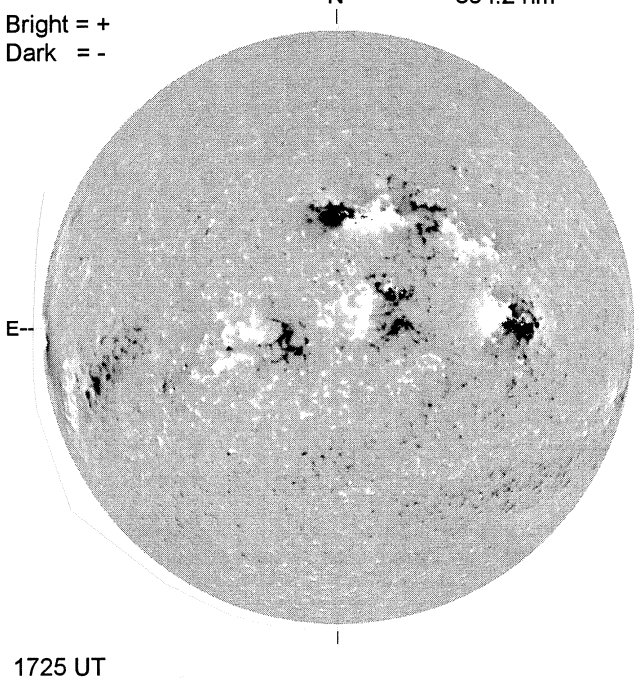

STANFORD MAGNETOGRAM

MT. WILSON MAGNETOGRAM

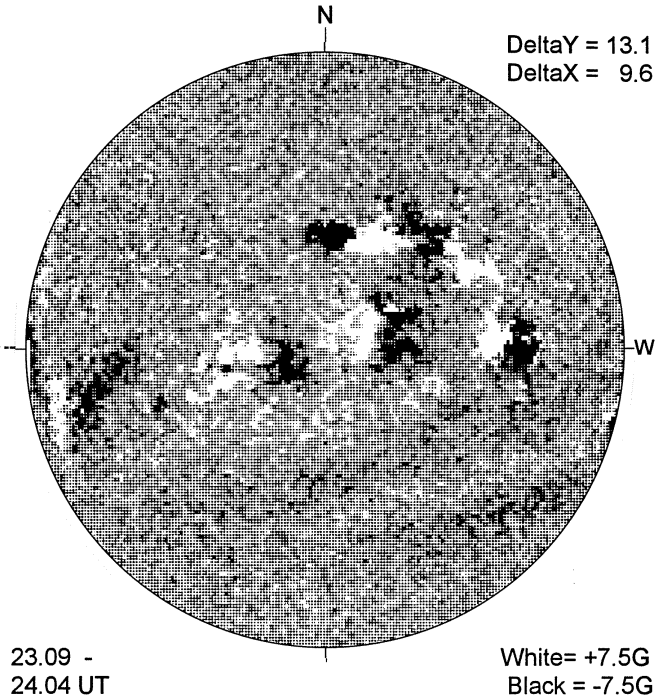

BIG BEAR H-ALPHA

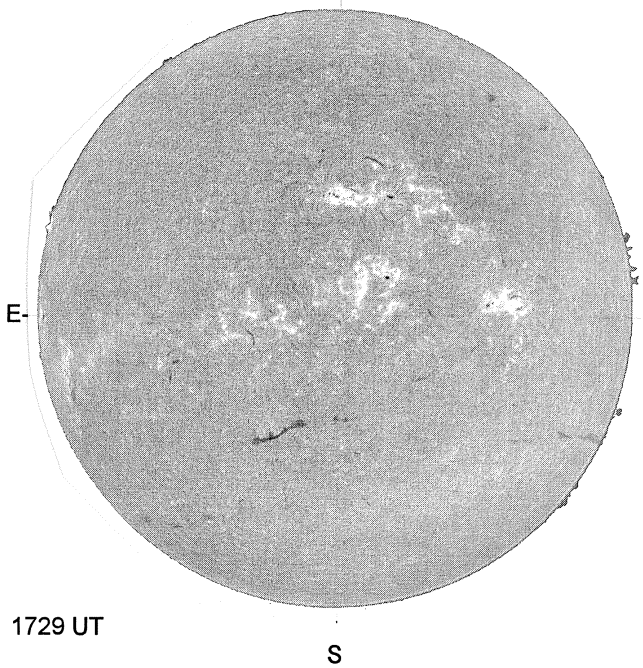

HOLLOMAN SUNSPOT

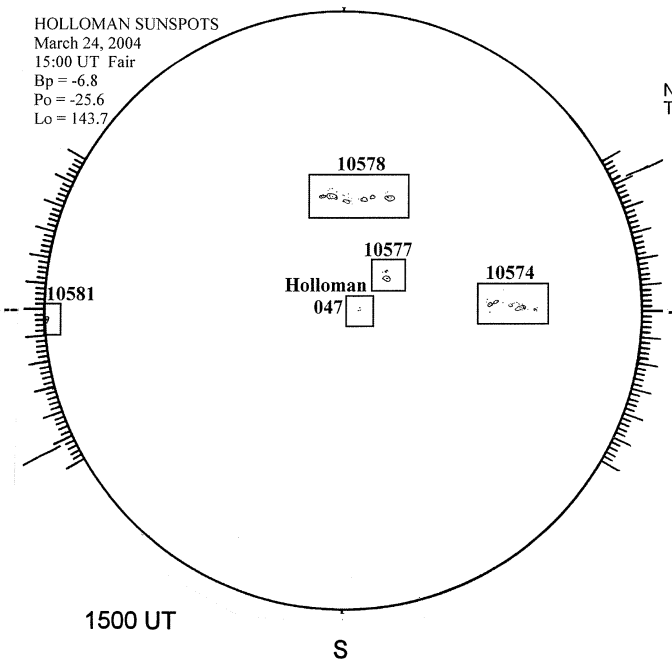
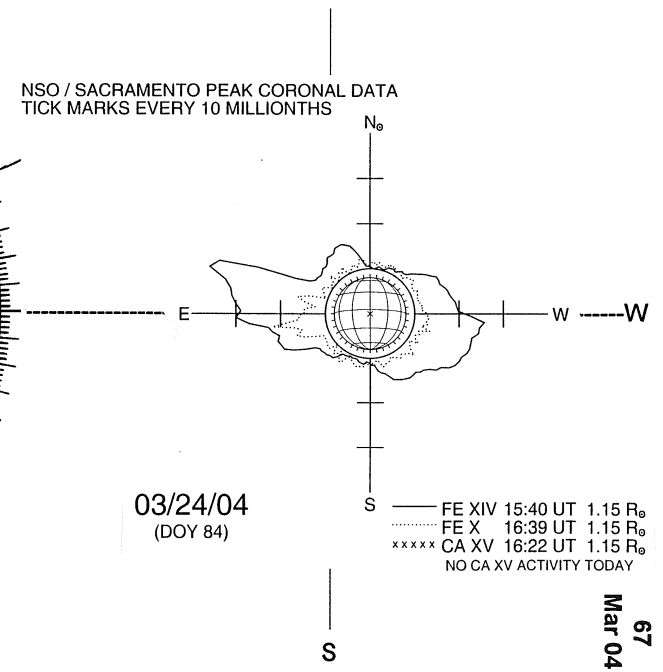
SACRAMENTO PEAK CORONA (1.15 Radii)----