MARCH 23, 2004 (P= -25.53, Bo = -6.94, Lo = 164.56)

KITT PEAK MAGNETOGRAM--SOLIS

854.2 nm

Bright = +
Dark = -

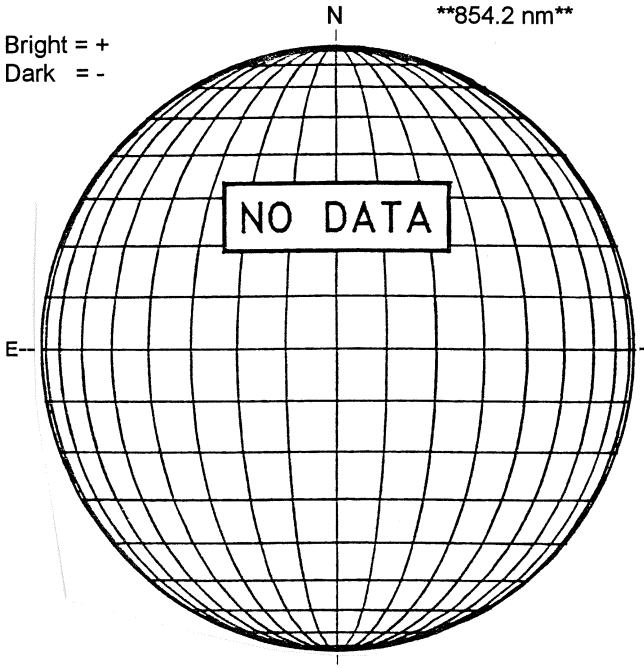

STANFORD MAGNETOGRAM

Solid = +
Dashed = -

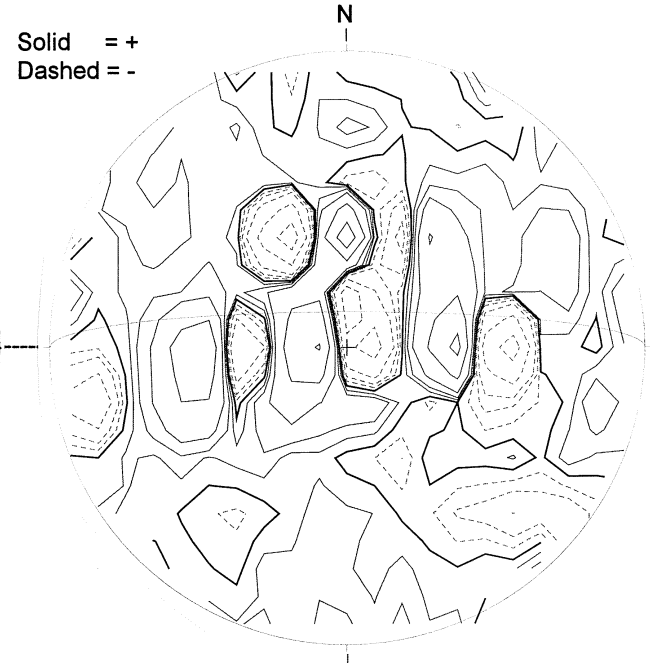

2339 UT

MT. WILSON MAGNETOGRAM

DeltaY =
DeltaX =

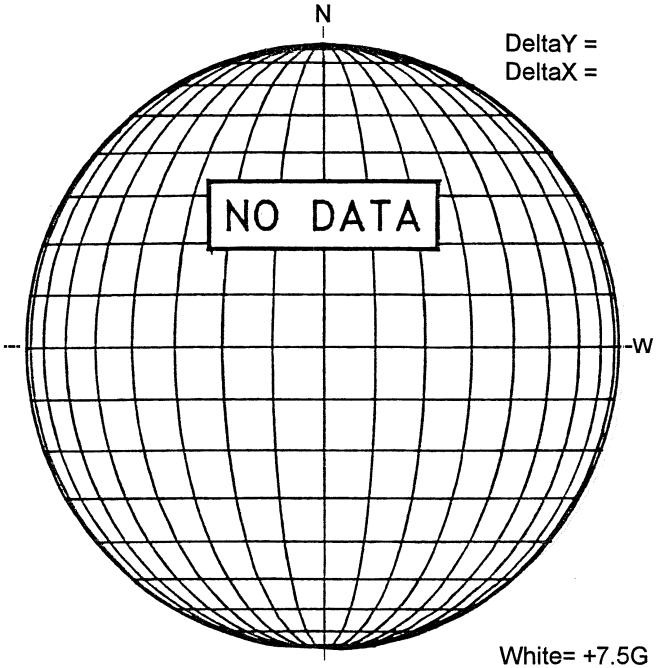

White= +7.5G
Black = -7.5G

BIG BEAR H-ALPHA

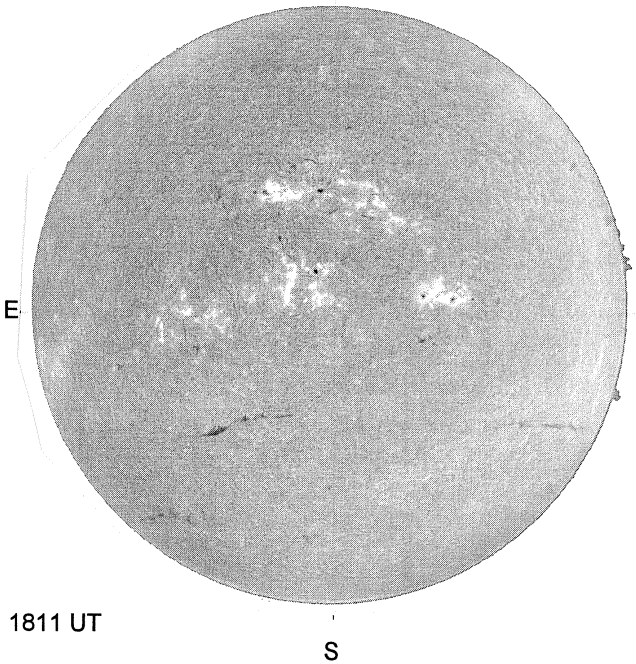

1811 UT

HOLLOMAN SUNSPOTS

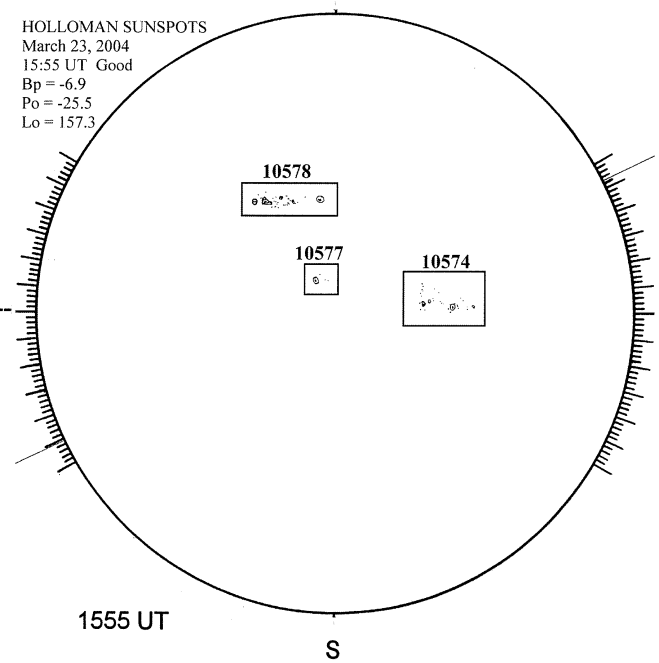

1555 UT
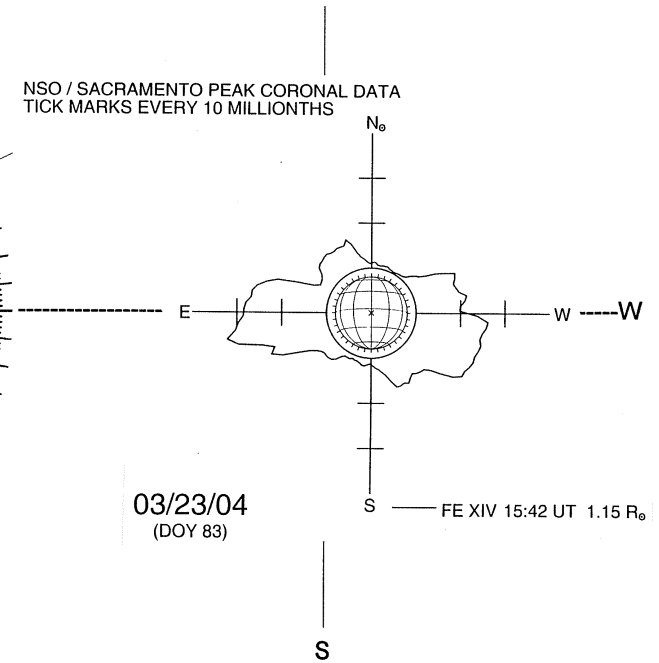
SACRAMENTO PEAK CORONA (1.15 Radii)