MARCH 17, 2004 (P= -24.79, Bo = -7.12, Lo = 243.66)

KITT PEAK MAGNETOGRAM--SOLIS

854.2 nm

Bright = +
Dark = -

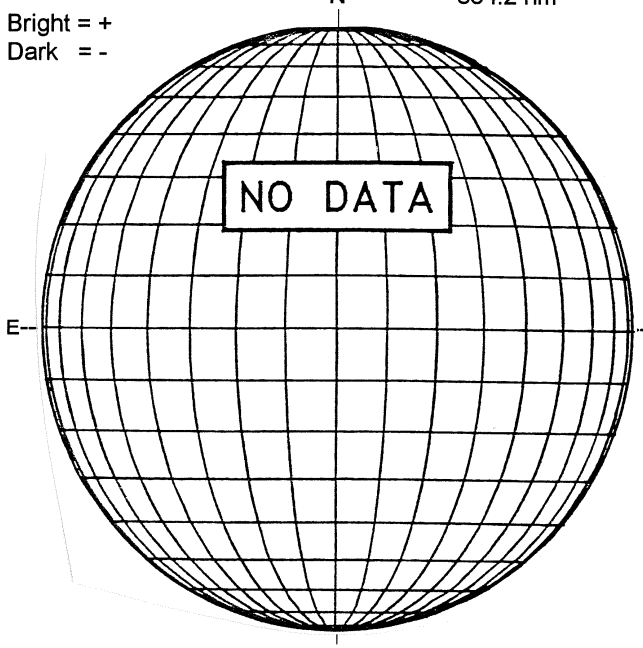

STANFORD MAGNETOGRAM

Solid = +
Dashed = -

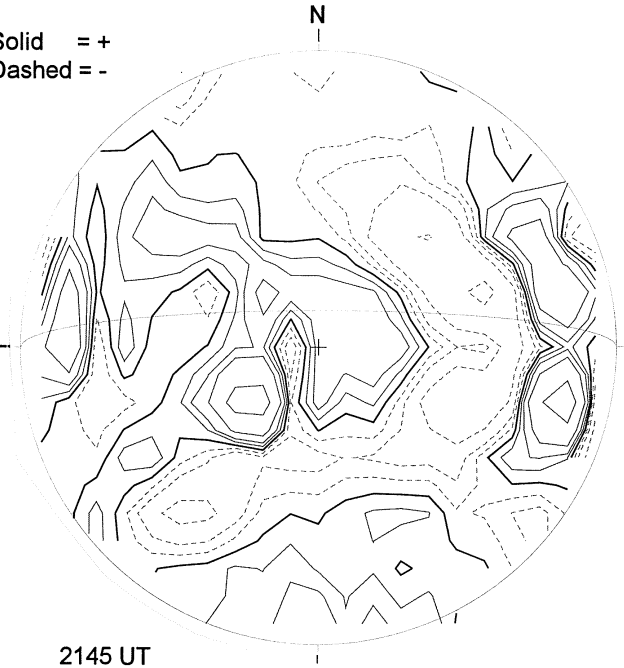

2145 UT

MT. WILSON MAGNETOGRAM

DeltaY = 13.1
DeltaX = 9.6

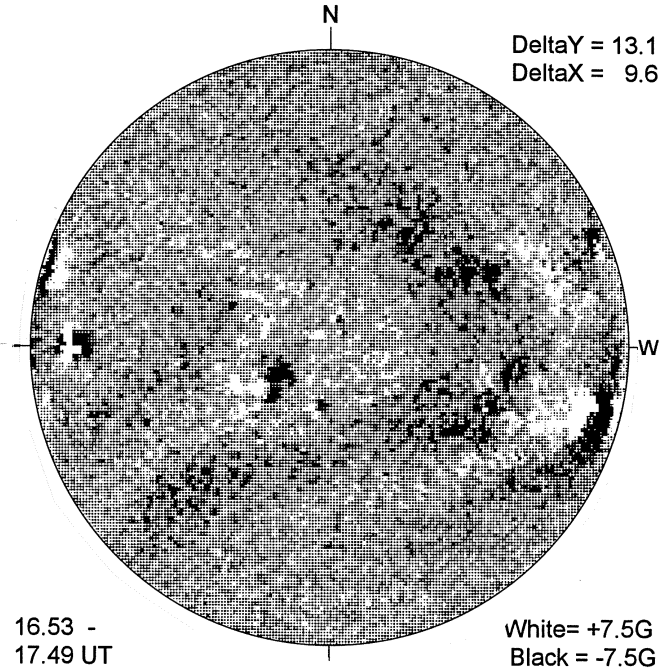

16.53 -
17.49 UT

White= +7.5G
Black = -7.5G

BIG BEAR H-ALPHA

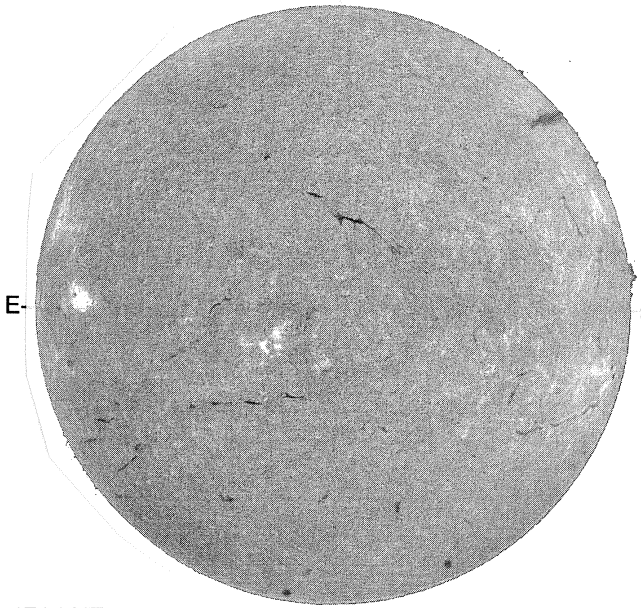

1714 UT

S

HOLLOMAN SUNSPOT

HOLLOMAN SUNSPOTS
March 17, 2004
18:00 UT Fair
Bp = -7.0
Po = -24.8
Lo = 236.0

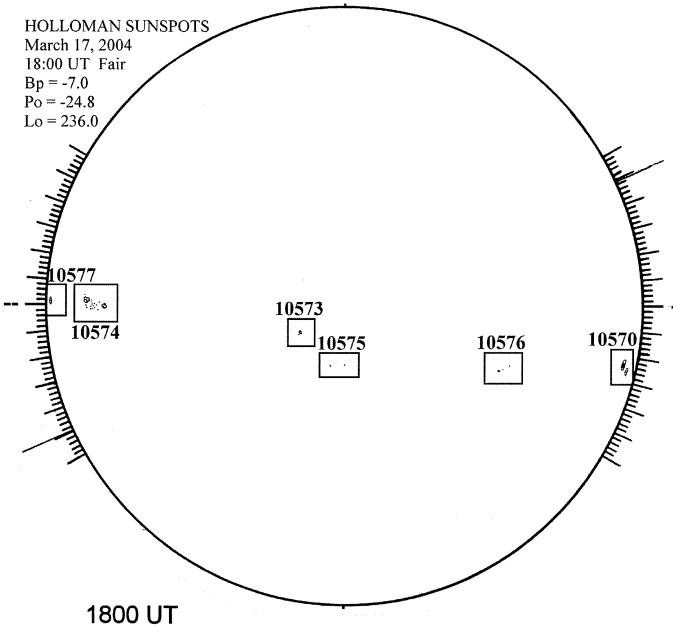

1800 UT

S

SACRAMENTO PEAK CORONA (1.15 Radii)----

NSO / SACRAMENTO PEAK CORONAL DATA
TICK MARKS EVERY 10 MILLIONTHS

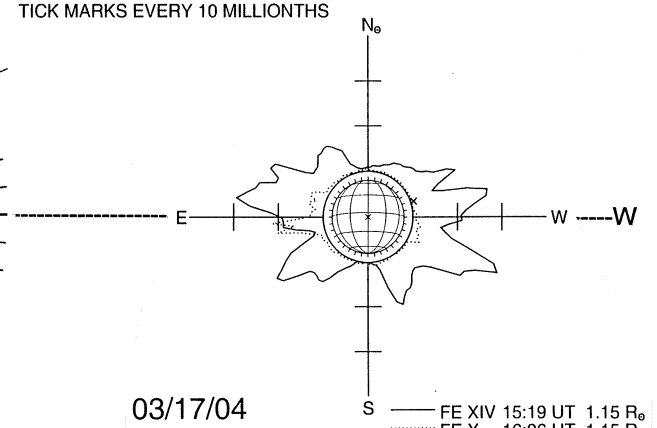

03/17/04
(DOY 77)

FE XIV 15:19 UT 1.15 R⊙
FE X 16:36 UT 1.15 R⊙
xxxxx CA XV 15:59 UT 1.15 R⊙

S