FEBRUARY 26, 2004 (P= -20.57, Bo = -7.16, Lo = 147.18)

KITT PEAK MAGNETOGRAM--SOLIS

854.2 nm

Bright = +
Dark = -

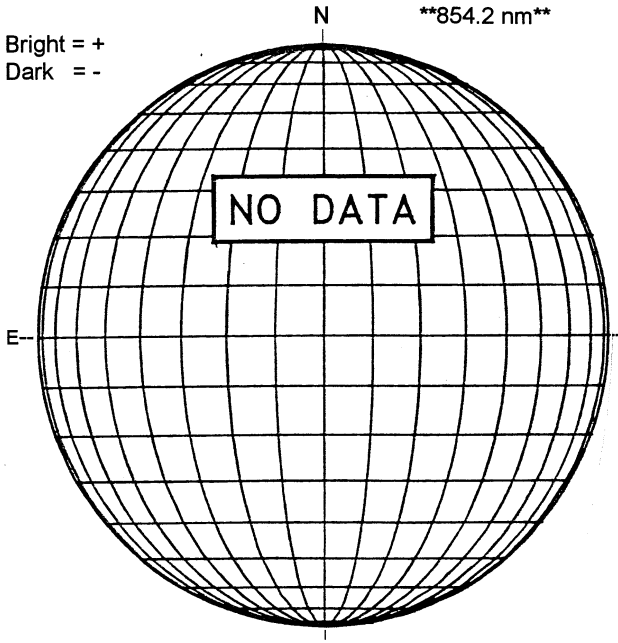

STANFORD MAGNETOGRAM

Solid = +
Dashed = -

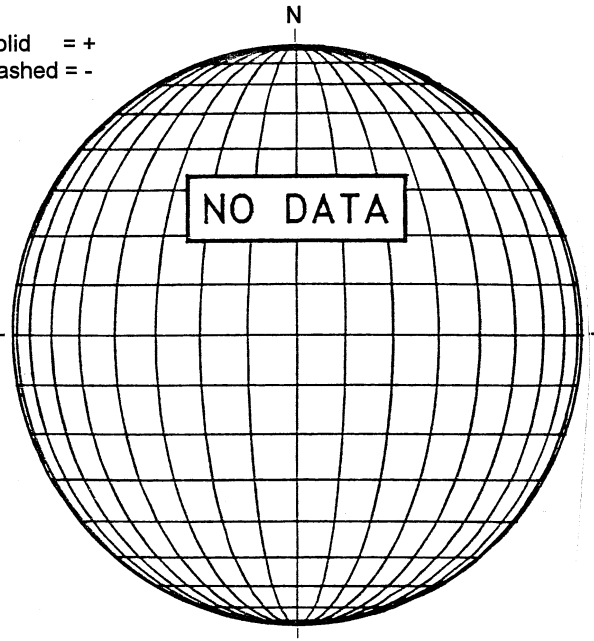

MT. WILSON MAGNETOGRAM

DeltaY = 20.1
DeltaX = 13.0

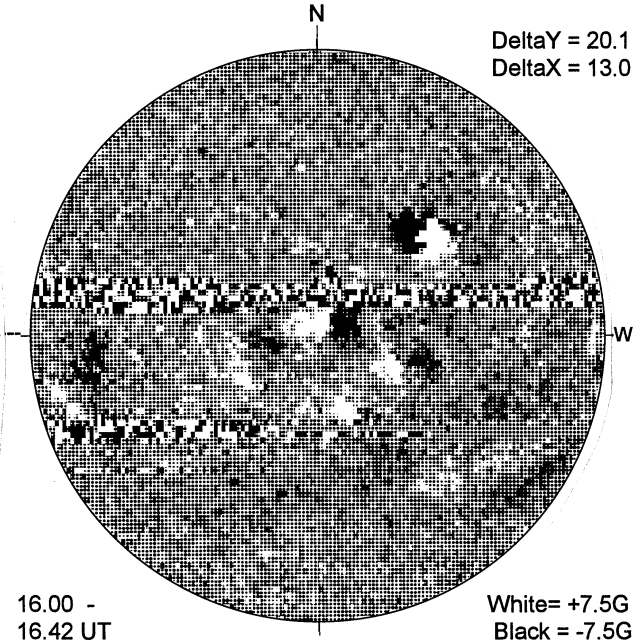

16.00 -
16.42 UT

White= +7.5G
Black = -7.5G

CATANIA H-ALPHA

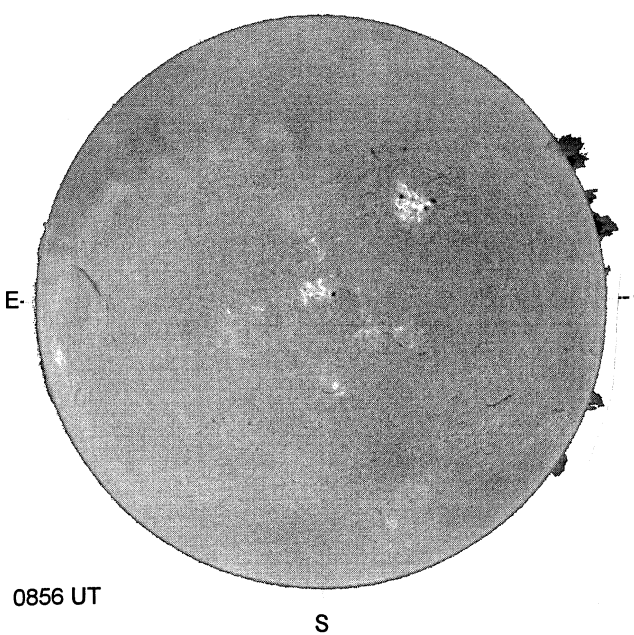

0856 UT

HOLLOMAN SUNSPOT

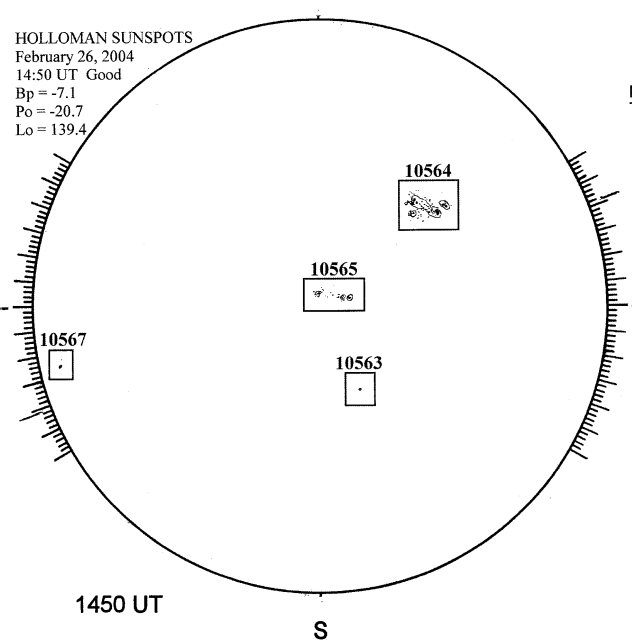

1450 UT

SACRAMENTO PEAK CORONA (1.15 Radii)----

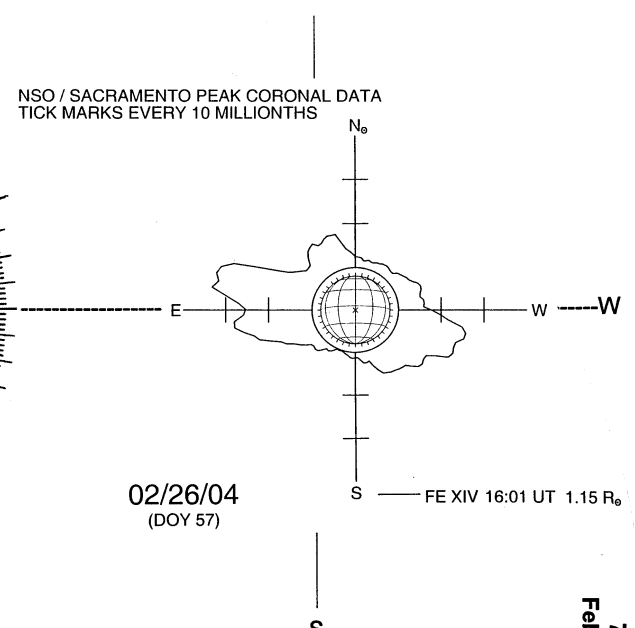

02/26/04
(DOY 57)

71
Feb 04