# FEBRUARY 25, 2004 ( P= -20.29, Bo = -7.14, Lo = 160.35)

## KITT PEAK MAGNETOGRAM--SOLIS

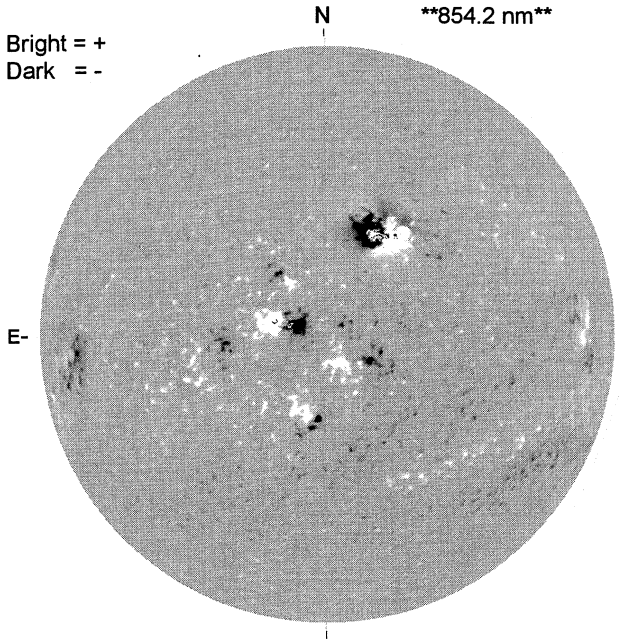


## STANFORD MAGNETOGRAM

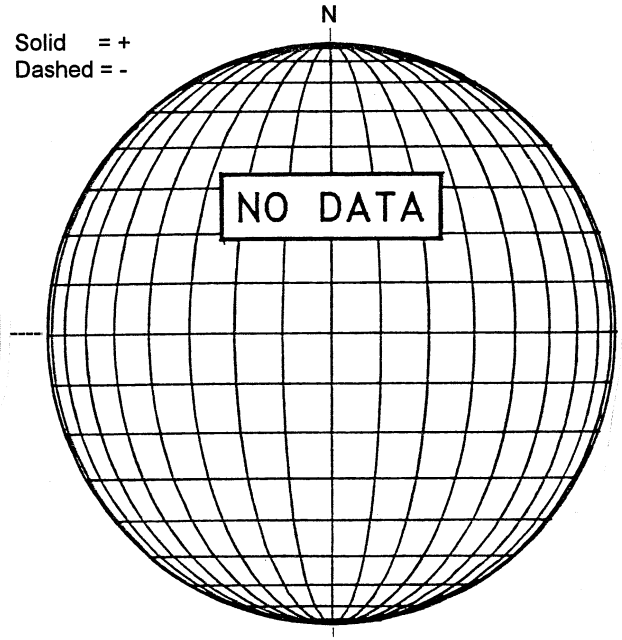


## MT. WILSON MAGNETOGRAM

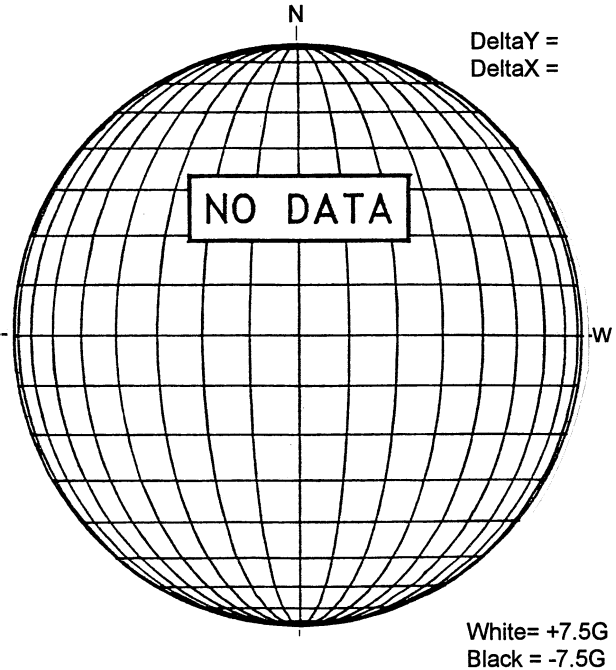


## BIG BEAR H-ALPHA

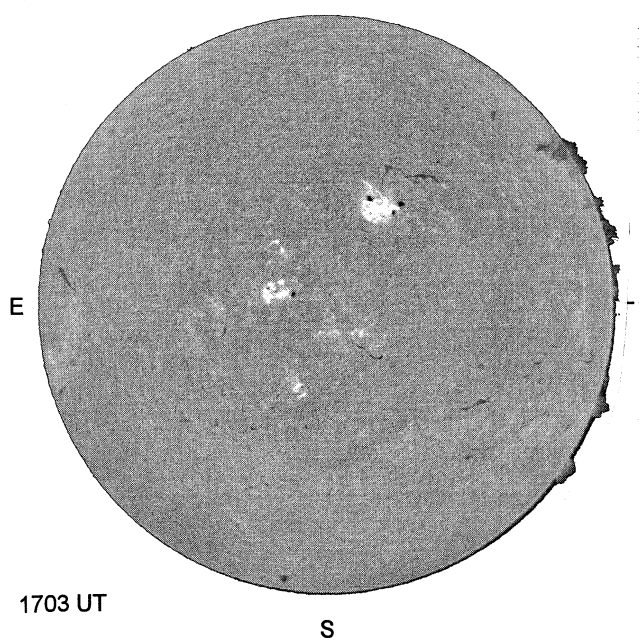


## HOLLOMAN SUNSPOT

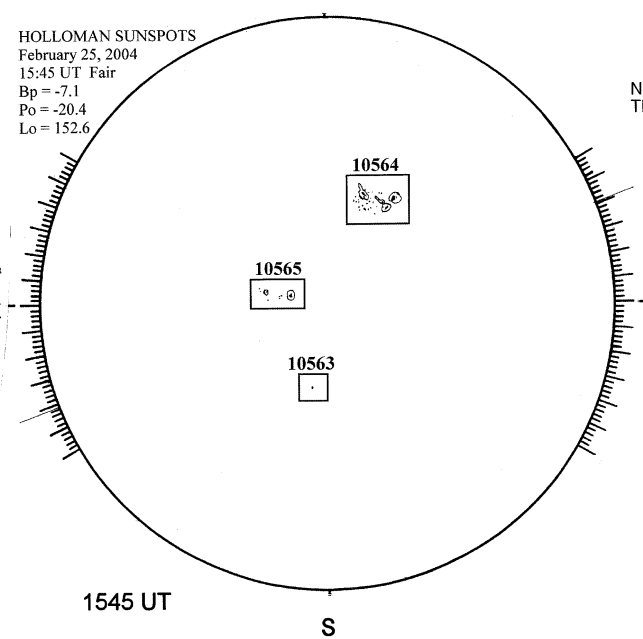

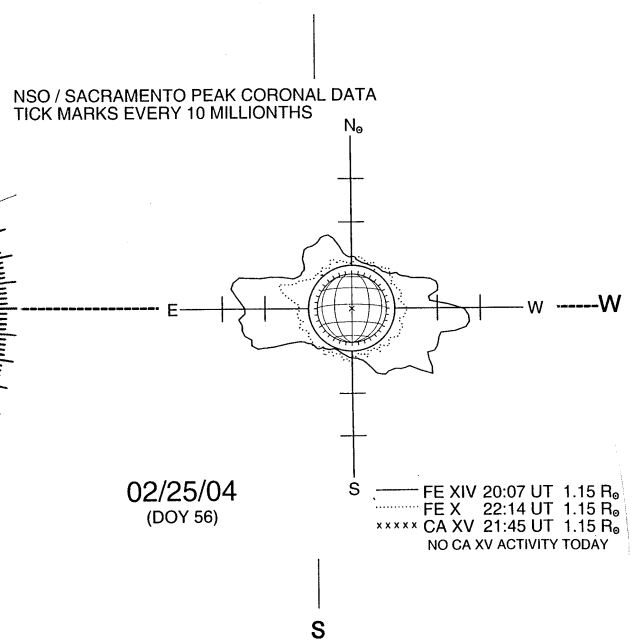
## SACRAMENTO PEAK CORONA (1.15 Radii)----