JANUARY 28, 2004 (P= -10.23, Bo = -5.68, Lo = 169.04)

KITT PEAK MAGNETOGRAM--SOLIS

854.2 nm

Bright = +
Dark = -

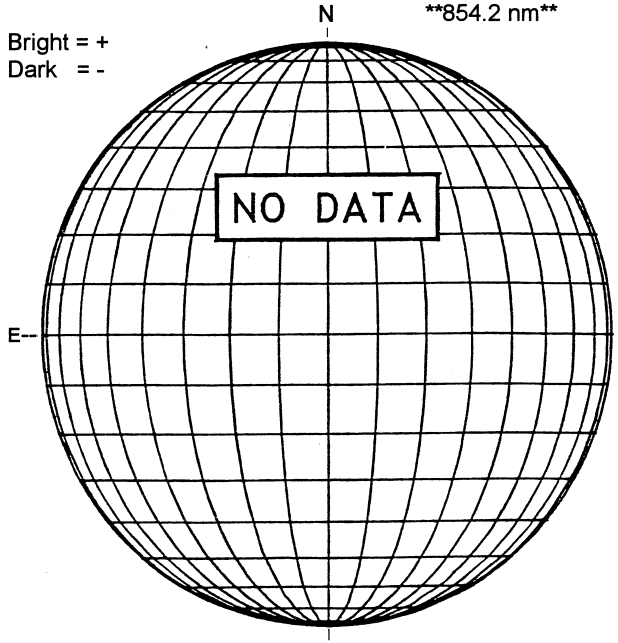

STANFORD MAGNETOGRAM

Solid = +
Dashed = -

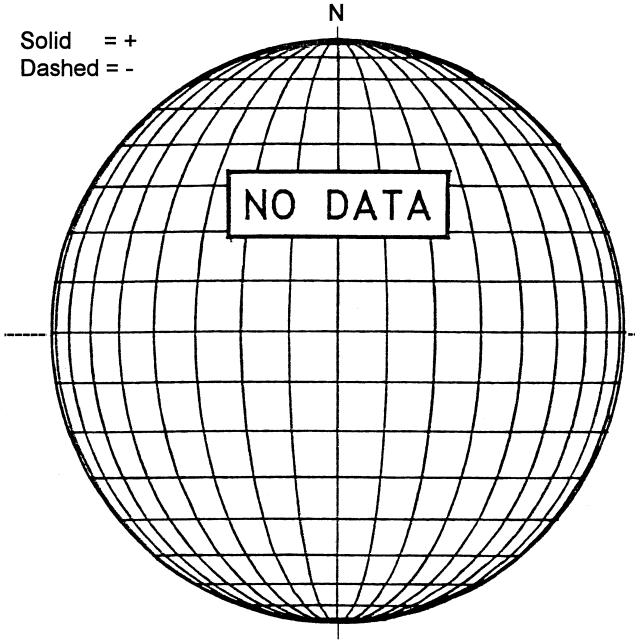

MT. WILSON MAGNETOGRAM

DeltaY = 13.1
DeltaX = 9.6

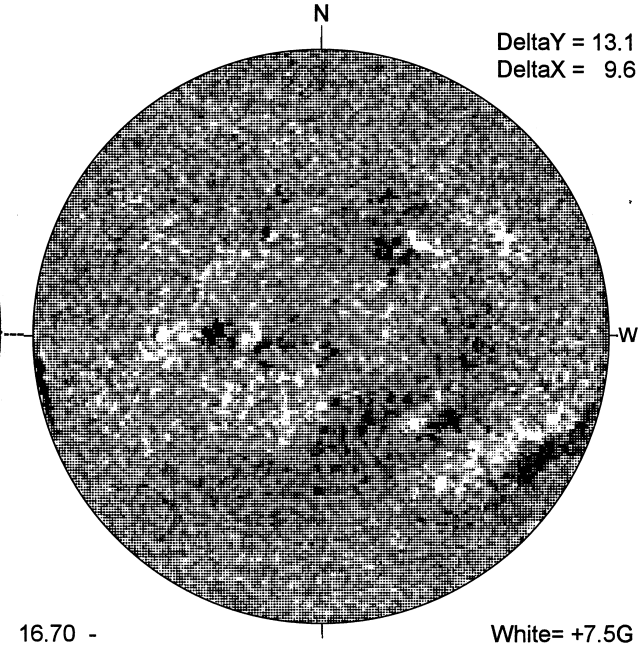

16.70 -
17.67 UT

White= +7.5G
Black = -7.5G

BIG BEAR H-ALPHA

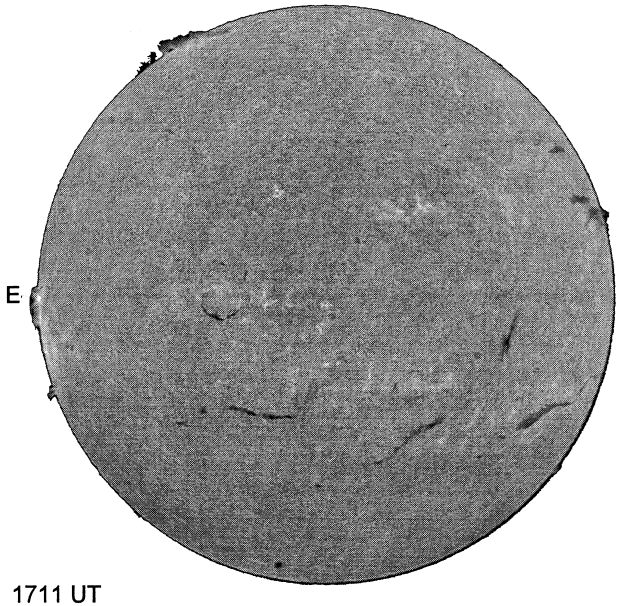

1711 UT

S

SAN VITO SUNSPOT

SAN VITO SUNSPOTS
January 28, 2004
10:45 UT Poor
Bp = -5.6
Po = -10.3
Lo = 165.2

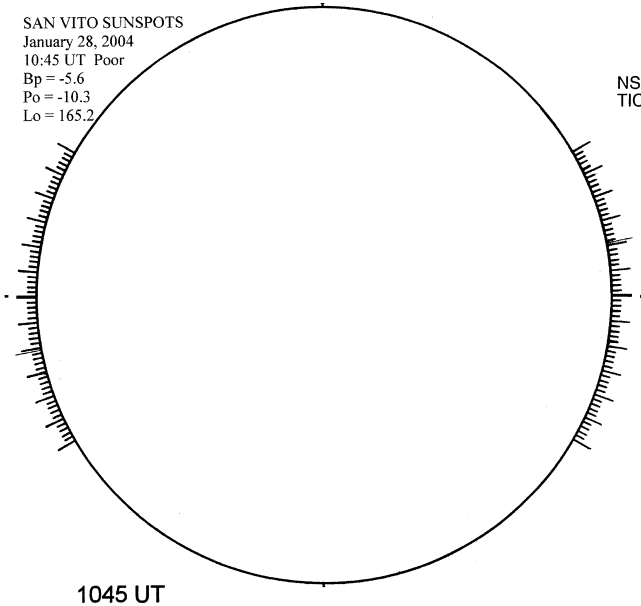

1045 UT

S

SACRAMENTO PEAK CORONA (1.15 Radii)----

NSO / SACRAMENTO PEAK CORONAL DATA
TICK MARKS EVERY 10 MILLIONTHS

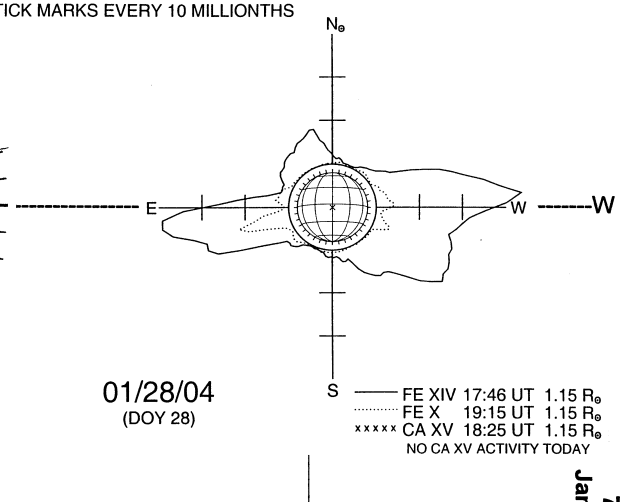

01/28/04
(DOY 28)

FE XIV 17:46 UT 1.15 $R_\odot$
FE X 19:15 UT 1.15 $R_\odot$
xxxxx CA XV 18:25 UT 1.15 $R_\odot$
NO CA XV ACTIVITY TODAY

S

71
Jan 04