JANUARY 23, 2004 (P= -8.04, Bo = -5.25, Lo = 234.88)

KITT PEAK MAGNETOGRAM--SOLIS

Bright = +
Dark = -

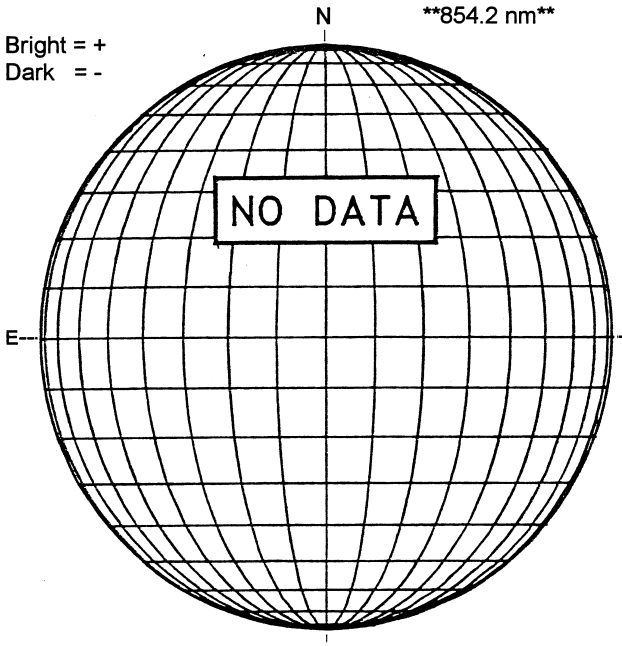

STANFORD MAGNETOGRAM

Solid = +
Dashed = -

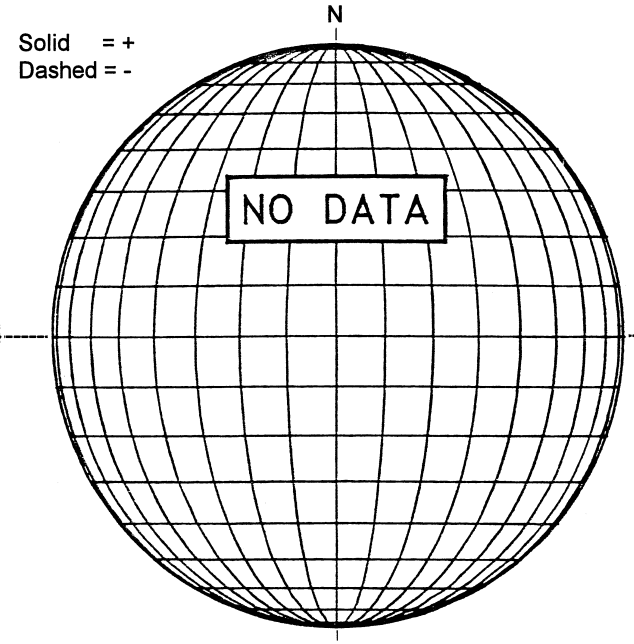

MT. WILSON MAGNETOGRAM

DeltaY = 13.1
DeltaX = 9.6

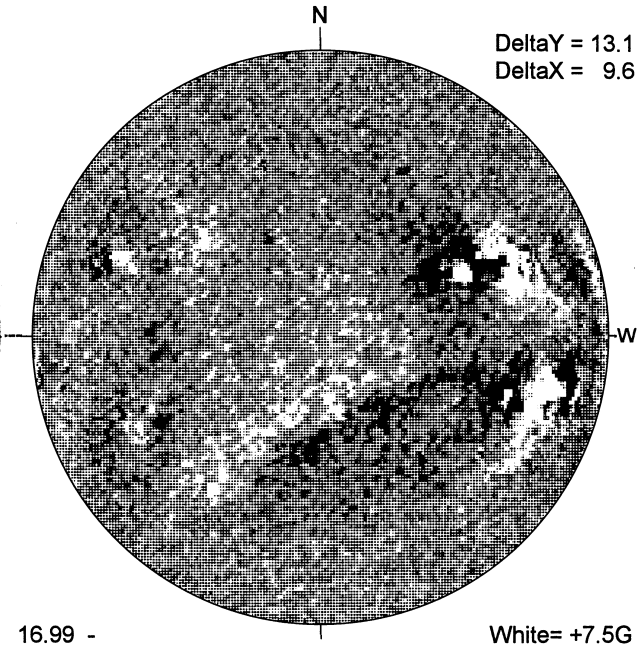

16.99 -
17.96 UT

White= +7.5G
Black = -7.5G

BIG BEAR H-ALPHA

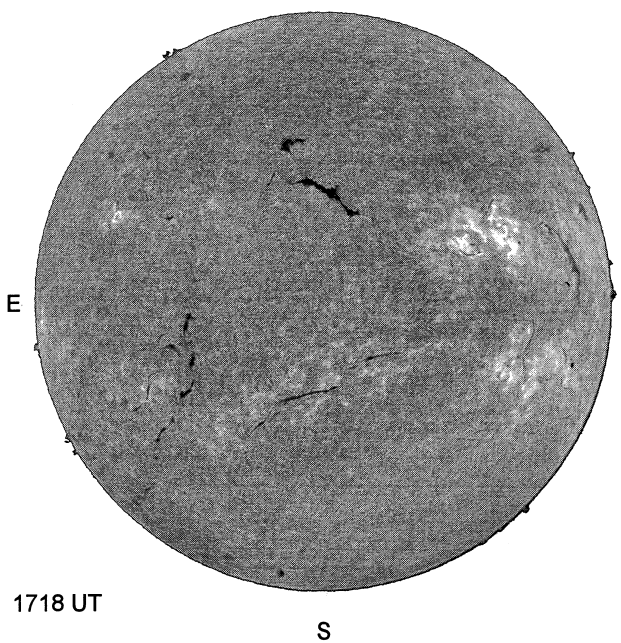

1718 UT

HOLLOMAN SUNSPOT

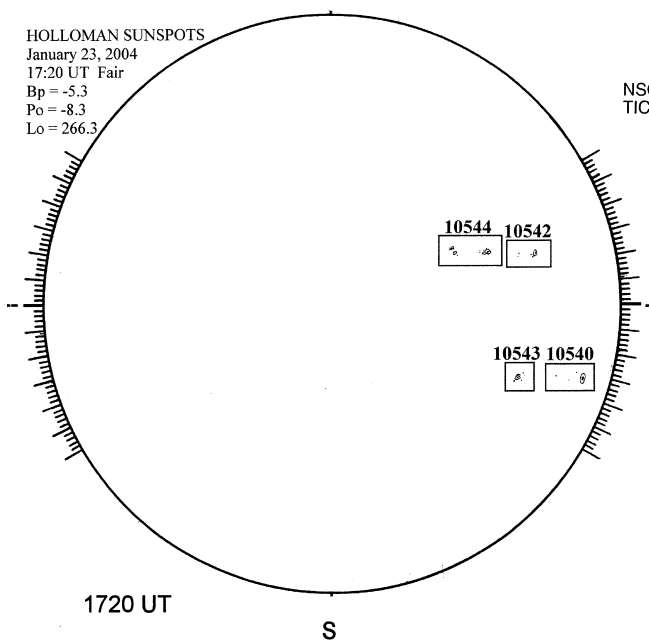

1720 UT

SACRAMENTO PEAK CORONA (1.15 Radii)

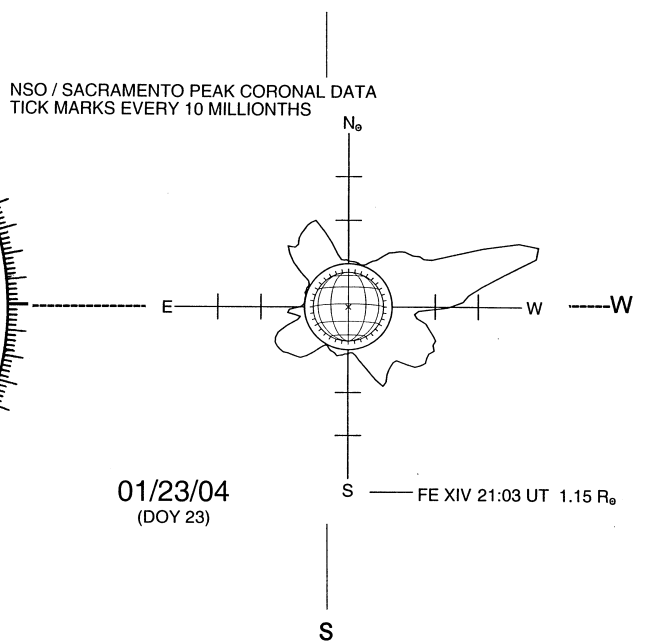

01/23/04
(DOY 23)