DECEMBER 23, 2003 (P= 6.70, Bo = -1.86, Lo = 283.13)

KITT PEAK MAGNETOGRAM--SOLIS

630.2 nm

Bright = +
Dark = -

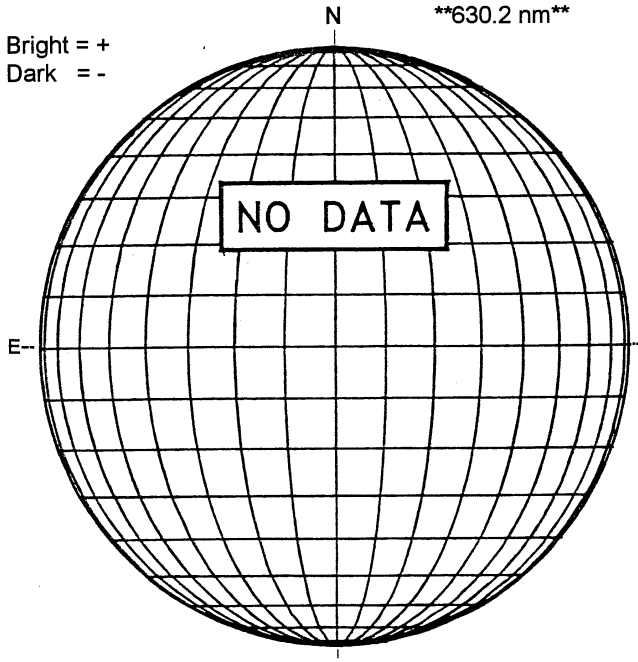

STANFORD MAGNETOGRAM

Solid = +
Dashed = -

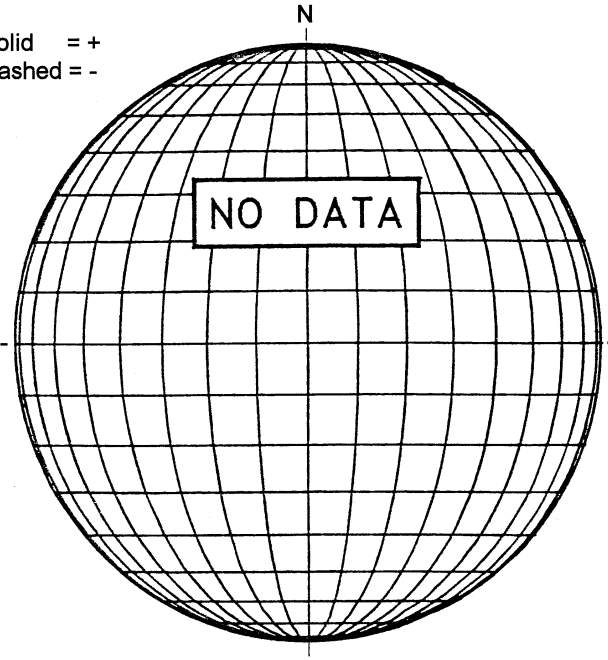

MT. WILSON MAGNETOGRAM

DeltaY =
DeltaX =

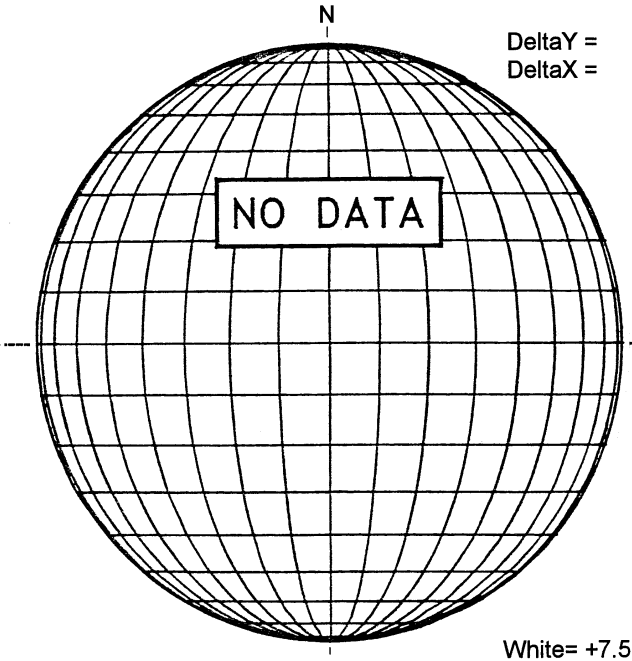

White= +7.5G
Black = -7.5G

KANZELHOHE H-ALPHA

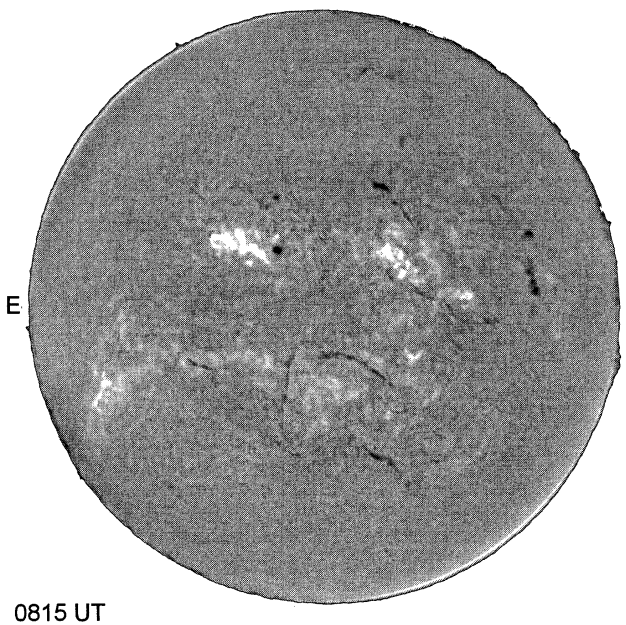

0815 UT

S

HOLLOMAN SUNSPOT

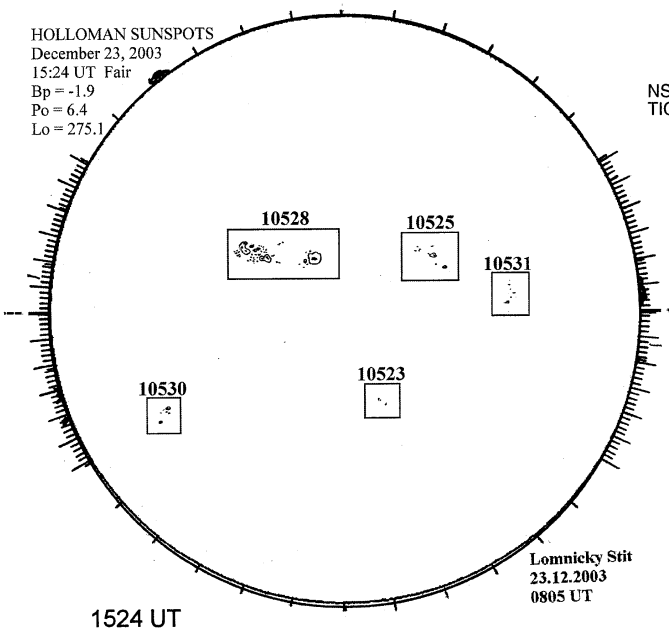

1524 UT
0805 UT LOMN Prom S

SACRAMENTO PEAK CORONA (1.15 Radii)----

NSO / SACRAMENTO PEAK CORONAL DATA
TICK MARKS EVERY 10 MILLIONTHS

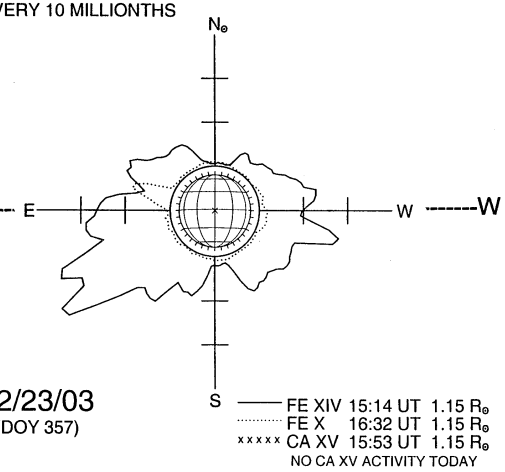

12/23/03
(DOY 357)

S