DECEMBER 22, 2003 (P= 7.17, Bo = -1.74, Lo = 296.30)

KITT PEAK MAGNETOGRAM--SOLIS

N **854.2 nm**

Bright = +
Dark = -

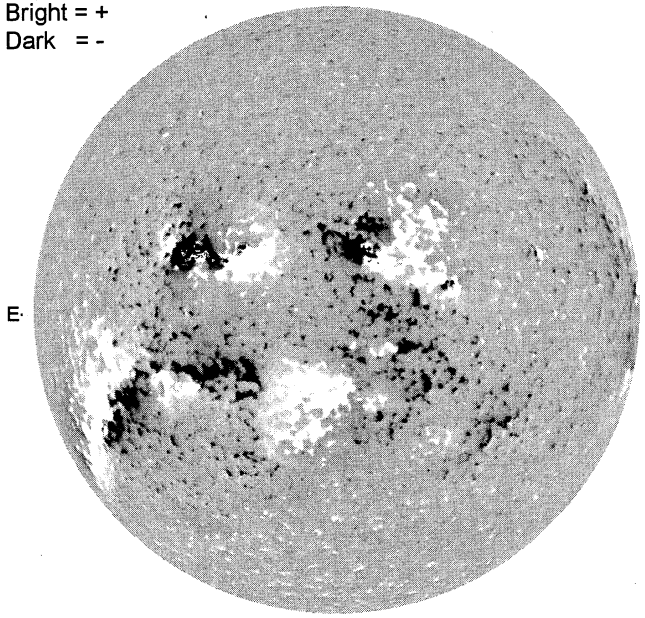

E

1858 UT

STANFORD MAGNETOGRAM

N

Solid = +
Dashed = -

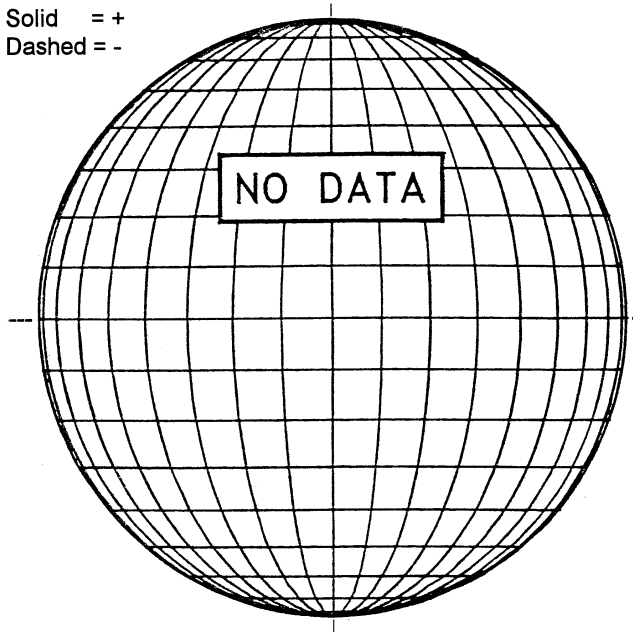

MT. WILSON MAGNETOGRAM

N

DeltaY =
DeltaX =

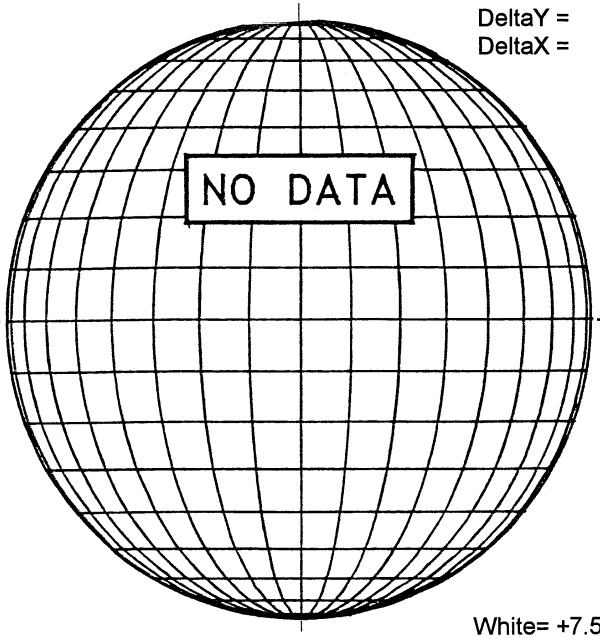

W

White= +7.5G
Black = -7.5G

BIG BEAR H-ALPHA

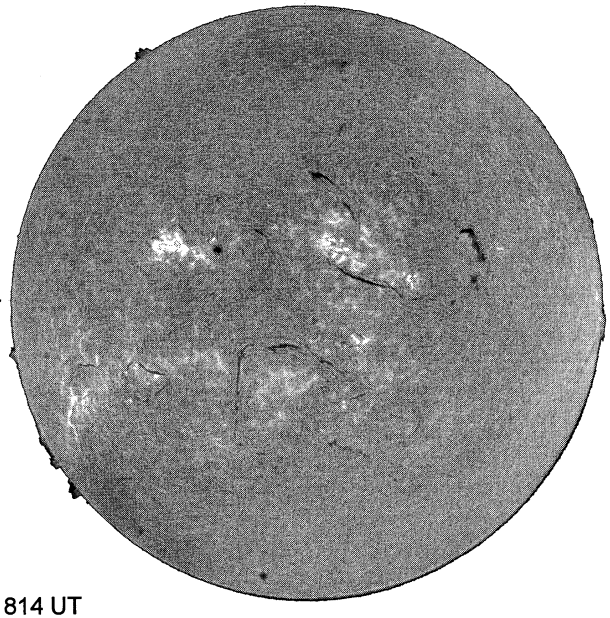

E

1814 UT

S

HOLLOMAN SUNSPOT

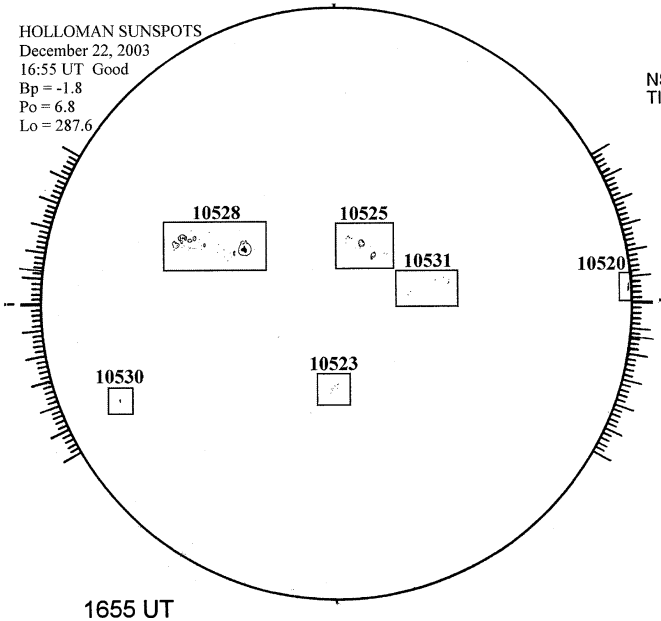

1655 UT

S

SACRAMENTO PEAK CORONA (1.15 Radii)----

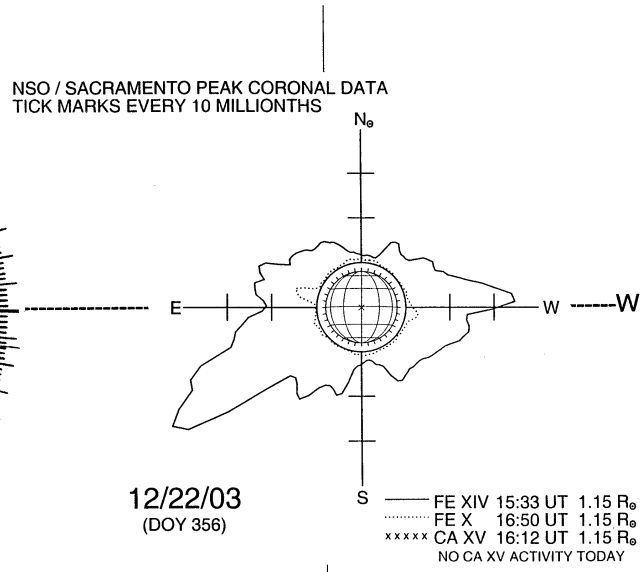

S