DECEMBER 19, 2003 (P= 8.57, Bo = -1.36, Lo = 335.82)

KITT PEAK MAGNETOGRAM--SOLIS

N **854.2 nm**

Bright = +
Dark = -

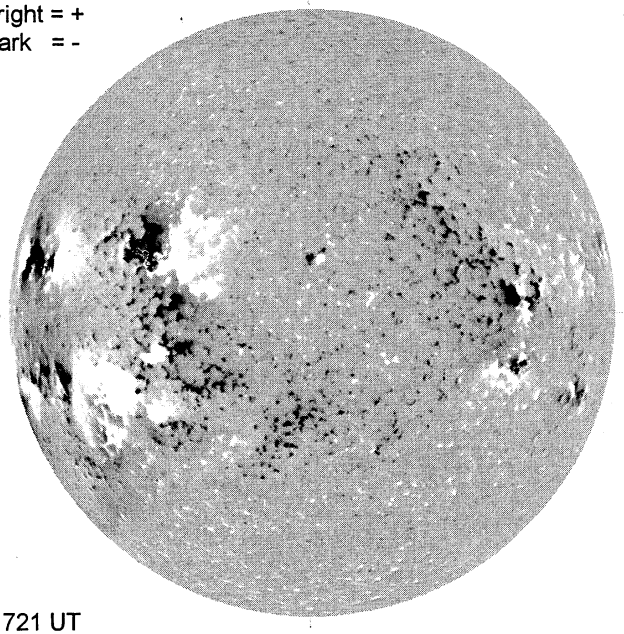

E-

1721 UT

STANFORD MAGNETOGRAM

Solid = +
Dashed = -

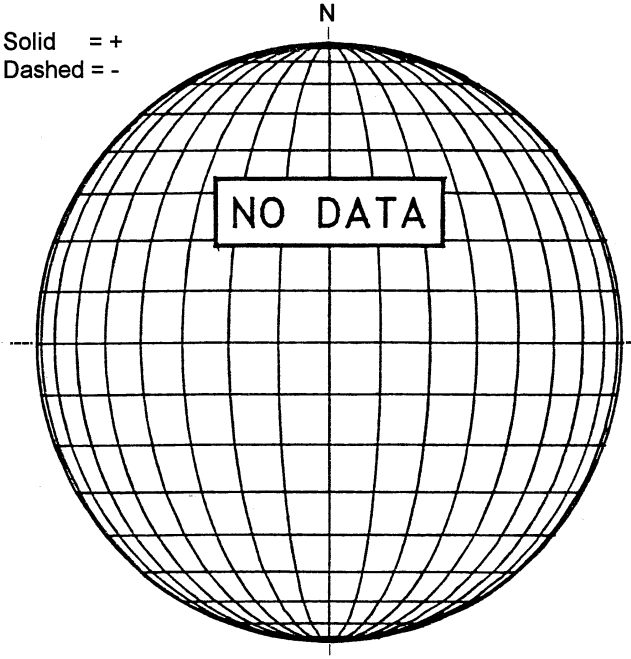

MT. WILSON MAGNETOGRAM

DeltaY =
DeltaX =

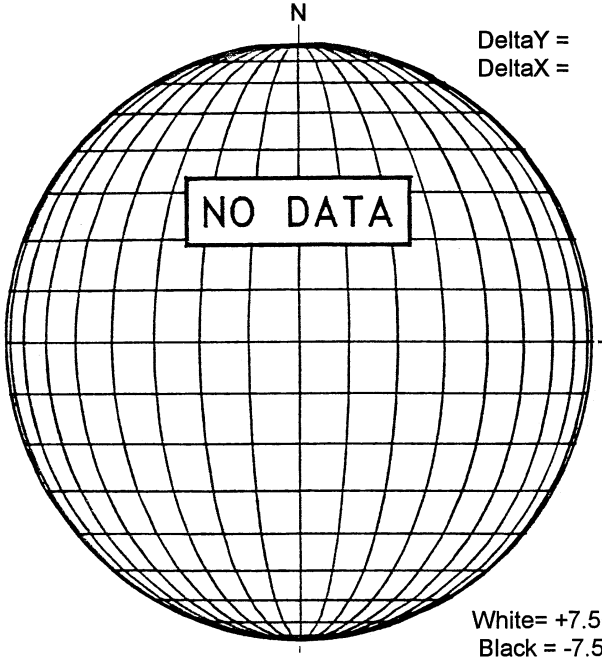

-W

White= +7.5G
Black = -7.5G

KANZELHOHE H-ALPHA

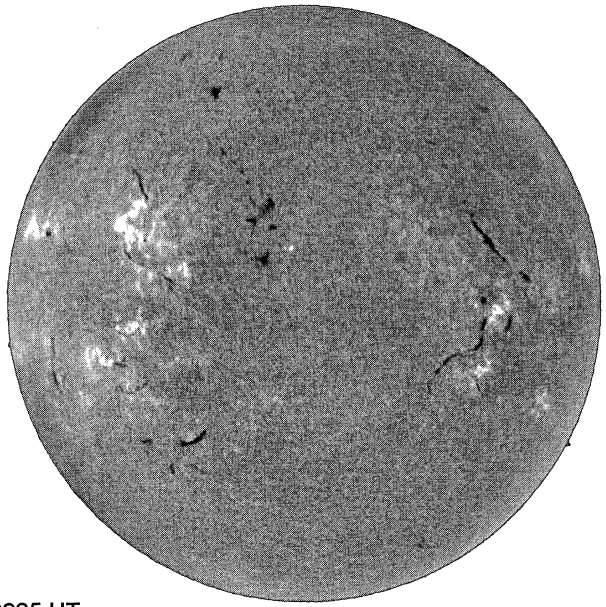

E

0925 UT

S

HOLLOMAN SUNSPOT

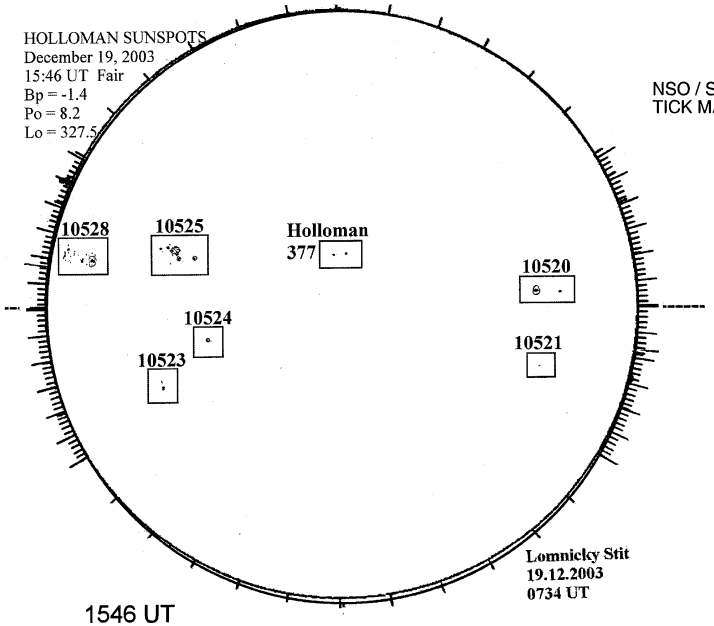

1546 UT
0734 UT LOMN Prom S

SACRAMENTO PEAK CORONA (1.15 Radii)----

NSO / SACRAMENTO PEAK CORONAL DATA
TICK MARKS EVERY 10 MILLIONTHS

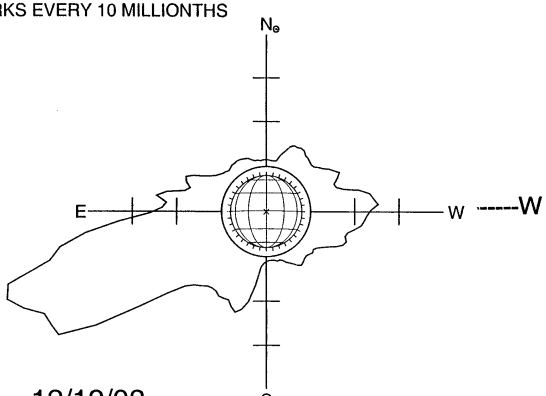

-----W

12/19/03
(DOY 353)

—— FE XIV 15:31 UT 1.15 R⊙
xxxxx CA XV 16:05 UT 1.15 R⊙
NO CA XV ACTIVITY TODAY

S