DECEMBER 18, 2003 (P= 9.04, Bo = -1.23, Lo = 348.99)

KITT PEAK MAGNETOGRAM--SOLIS

N **854.2 nm**

Bright = +
Dark = -

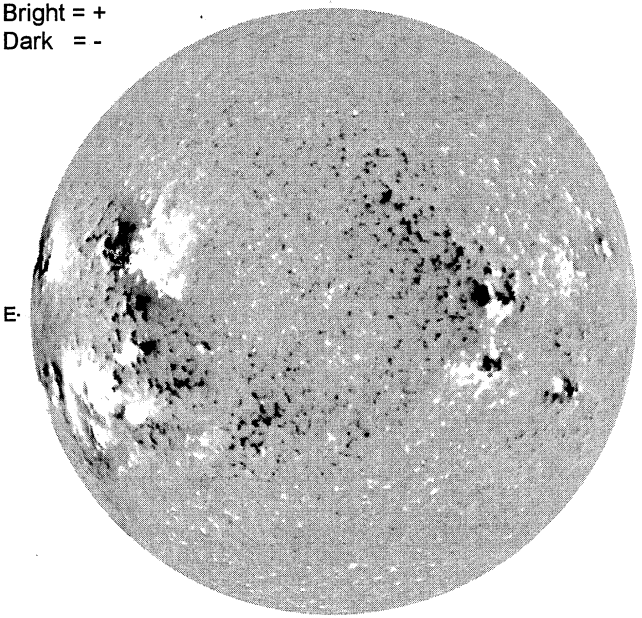

E

1922 UT

STANFORD MAGNETOGRAM

N

Solid = +
Dashed = -

1850 UT

MT. WILSON MAGNETOGRAM

N

DeltaY = 13.1
DeltaX = 9.6

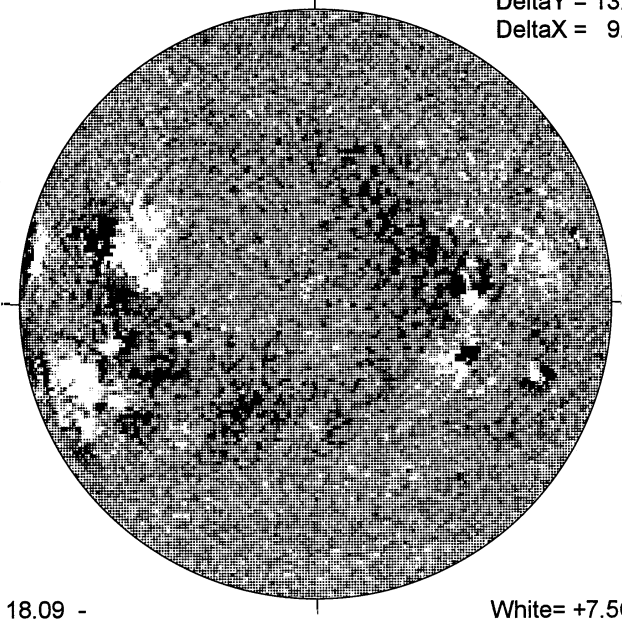

W

18.09 -
19.07 UT

White= +7.5G
Black = -7.5G

BIG BEAR H-ALPHA

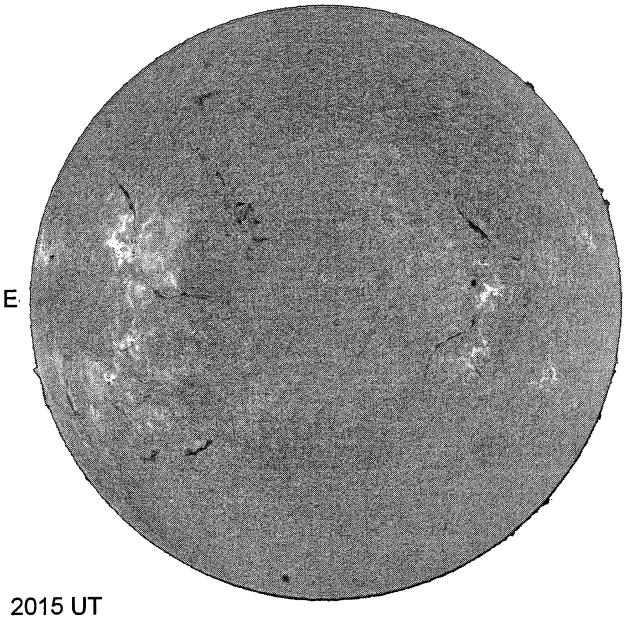

E

2015 UT

S

HOLLOMAN SUNSPOT

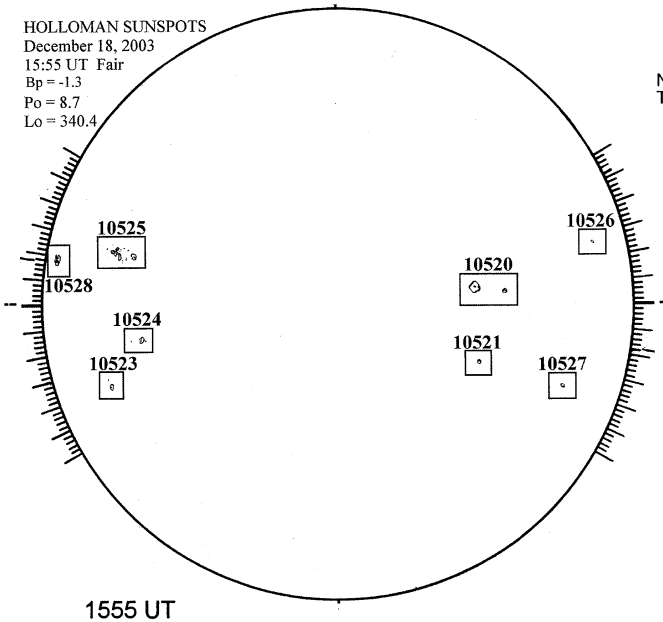

1555 UT

S

SACRAMENTO PEAK CORONA (1.15 Radii)----

NSO / SACRAMENTO PEAK CORONAL DATA
TICK MARKS EVERY 10 MILLIONTHS

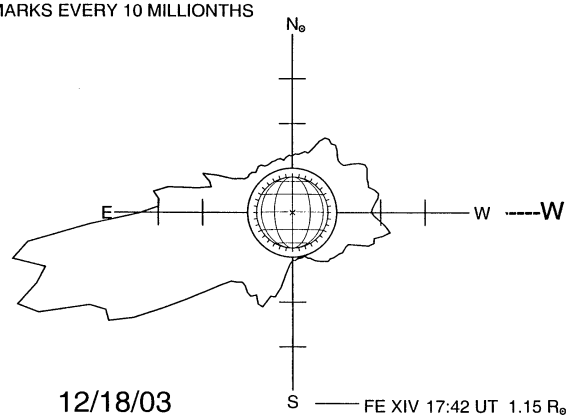

12/18/03
(DOY 352)

S

63
Dec 03