DECEMBER 16, 2003 (P= 9.95, Bo = -0.98, Lo = 15.34)

KITT PEAK MAGNETOGRAM--SOLIS

N **854.2 nm**

Bright = +
Dark = -

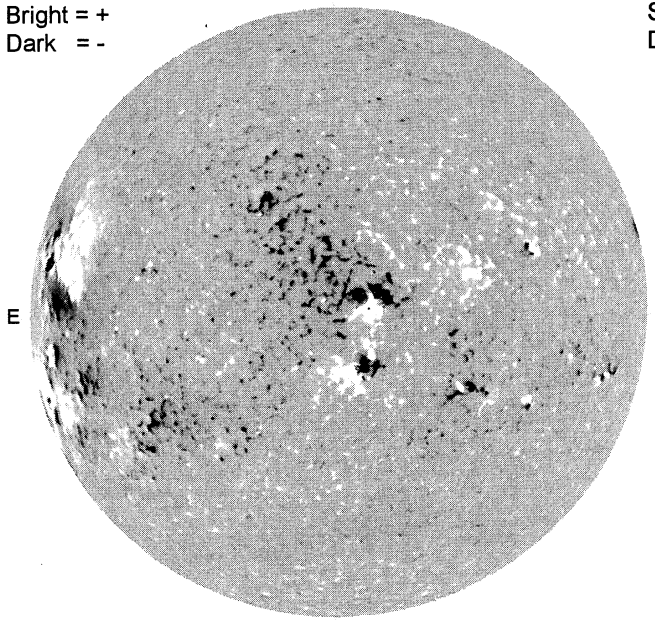

1958 UT

STANFORD MAGNETOGRAM

N

Solid = +
Dashed = -

2058 UT

MT. WILSON MAGNETOGRAM

N

DeltaY = 13.1
DeltaX = 9.6

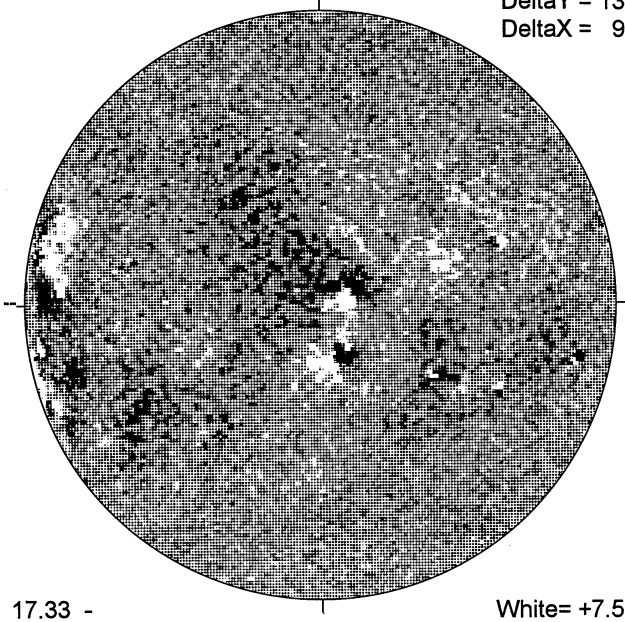

17.33 -
18.31 UT

White= +7.5G
Black = -7.5G

----- BIG BEAR H-ALPHA

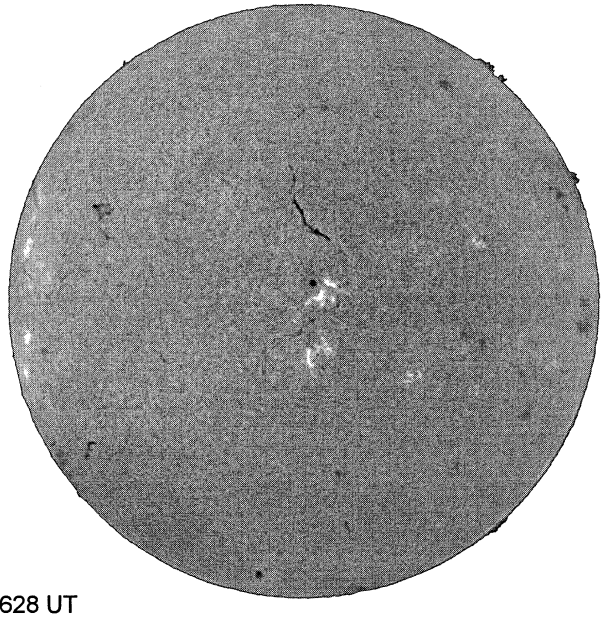

1628 UT

S

HOLLOMAN SUNSPOT

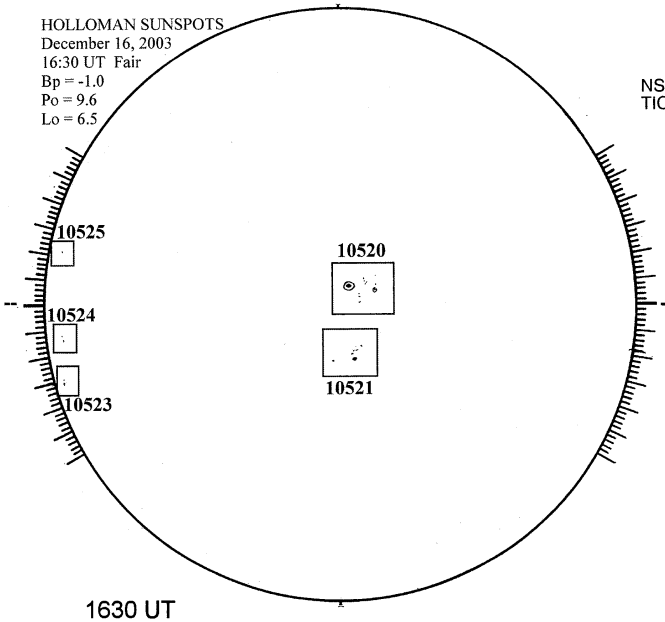

1630 UT

S

SACRAMENTO PEAK CORONA (1.15 Radii)----

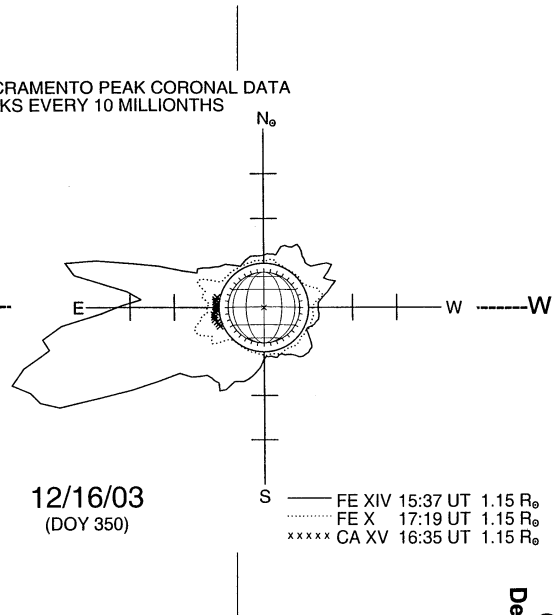

S