DECEMBER 11, 2003 (P= 12.18, Bo = -0.34, Lo = 81.22)

KITT PEAK MAGNETOGRAM--SOLIS

854.2 nm

Bright = +
Dark = -

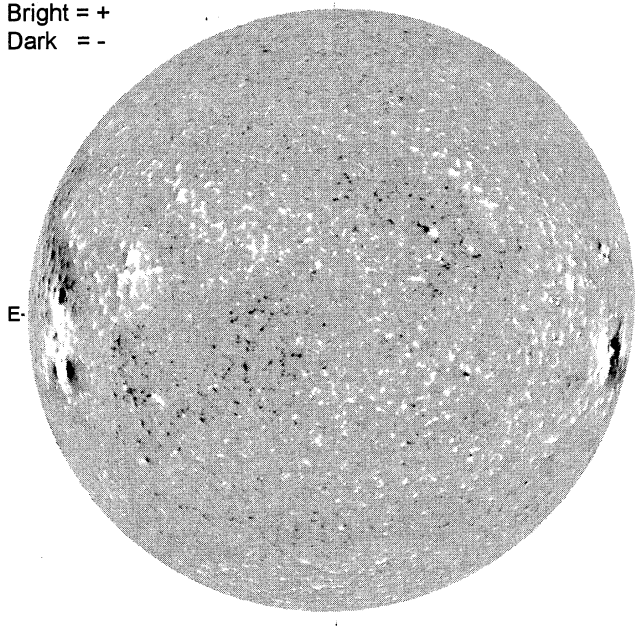

1714 UT

STANFORD MAGNETOGRAM

Solid = +
Dashed = -

2148 UT

MT. WILSON MAGNETOGRAM

DeltaY =
DeltaX =

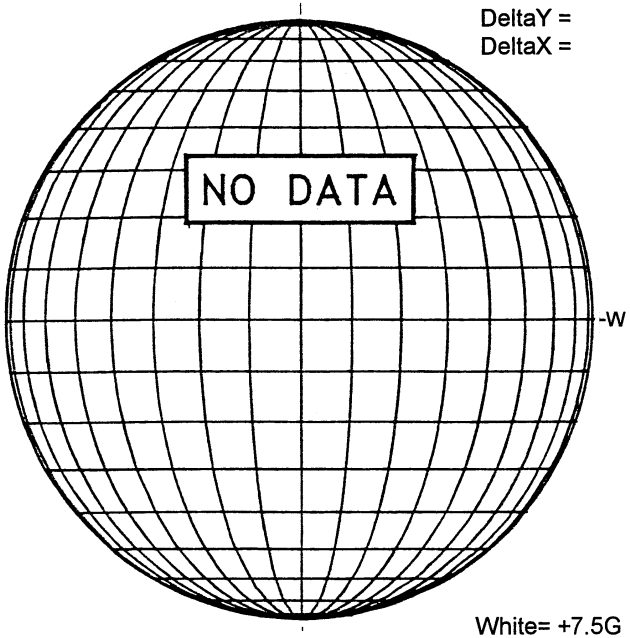

White= +7.5G
Black = -7.5G

KANZELHOHE-ALPHA

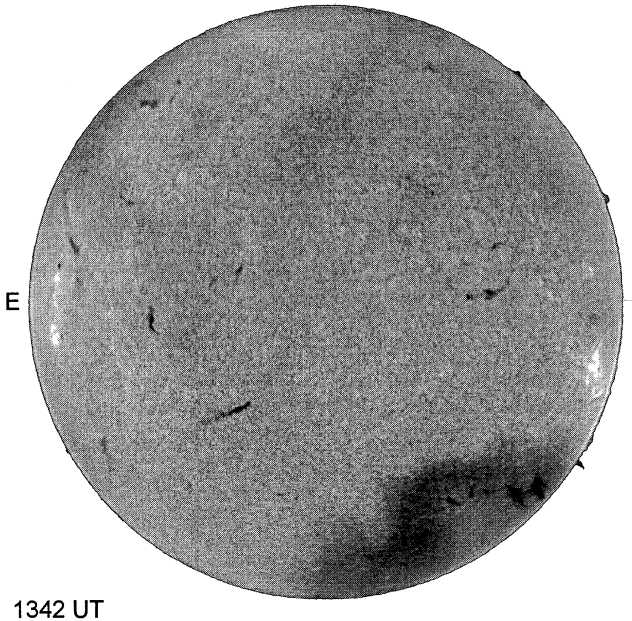

1342 UT

HOLLOMAN SUNSPOTS

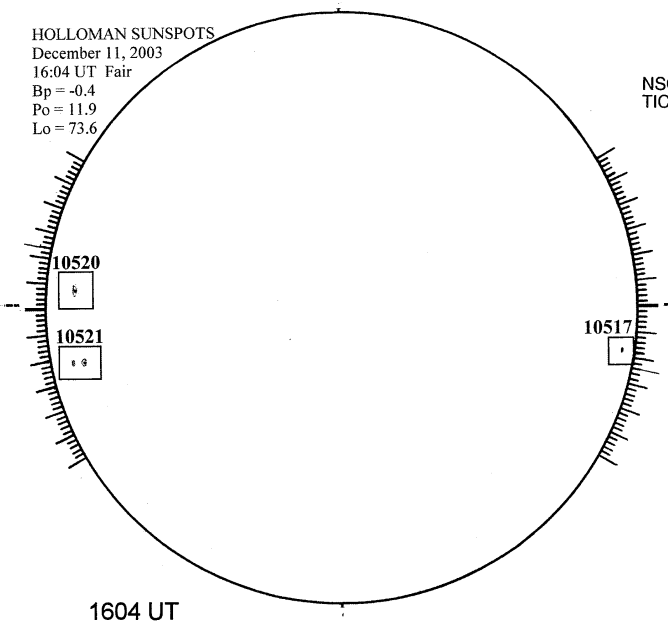

1604 UT

SACRAMENTO PEAK CORONA (1.15 Radii)----

NSO / SACRAMENTO PEAK CORONAL DATA
TICK MARKS EVERY 10 MILLIONTHS

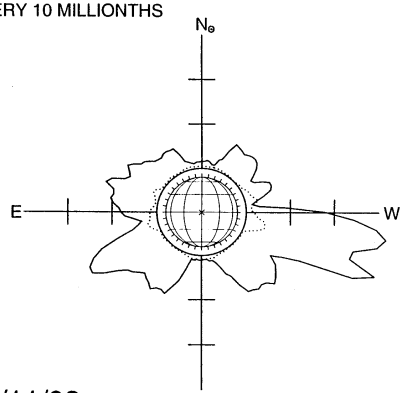

12/11/03
(DOY 345)

FE XIV 16:51 UT 1.15 R⊙
FE X 17:53 UT 1.15 R⊙
xxxxx CA XV 16:05 UT 1.15 R⊙
NO CA XV ACTIVITY TODAY

S