DECEMBER 9, 2003 (P= 13.04, Bo = -0.08, Lo = 107.57)

KITT PEAK MAGNETOGRAM--SOLIS

N **854.2 nm

Bright = +
Dark = -

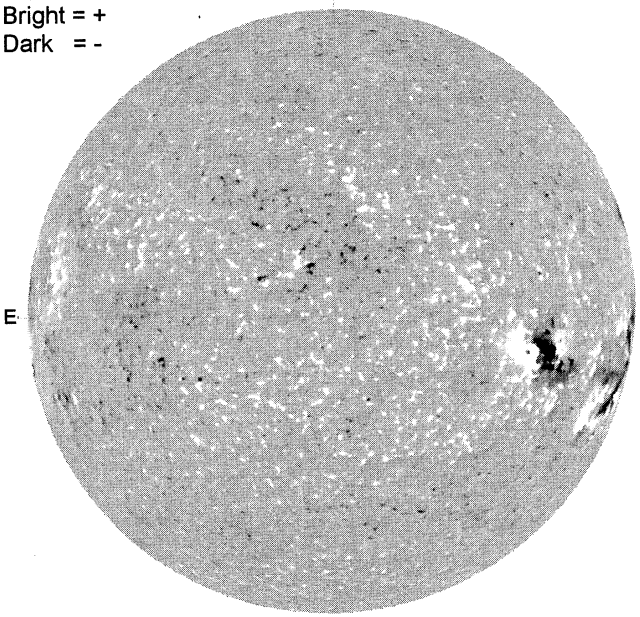

E

1810 UT

STANFORD MAGNETOGRAM

N

Solid = +
Dashed = -

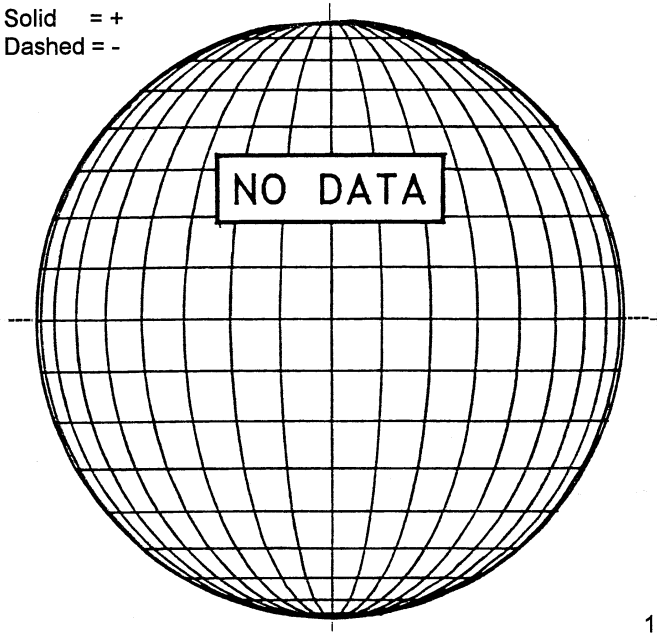

MT. WILSON MAGNETOGRAM

N

DeltaY = 13.1
DeltaX = 9.6

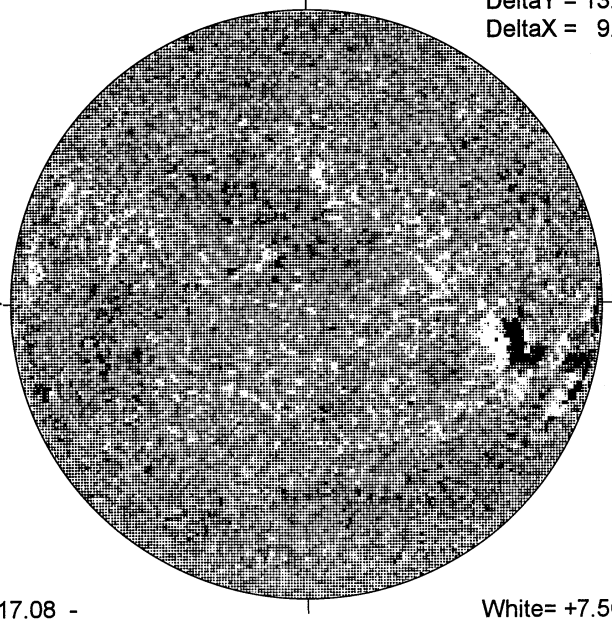

W

17.08 -
18.05 UT

White= +7.5G
Black = -7.5G

BIG BEAR H-ALPHA

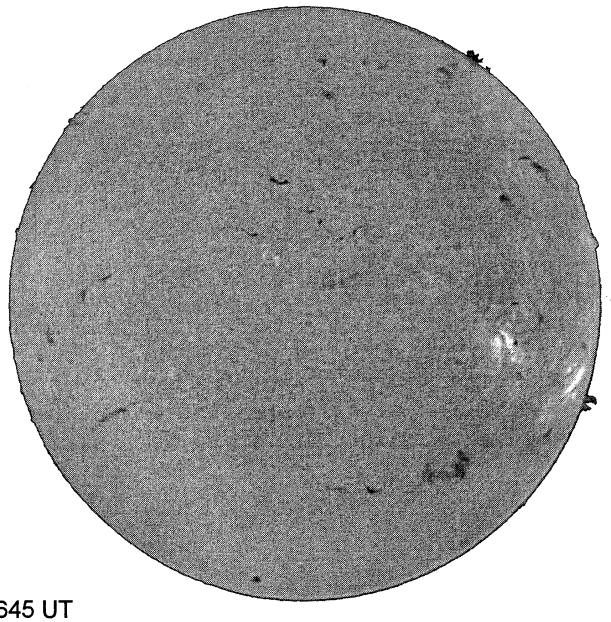

E

1645 UT

S

HOLLOMAN SUNSPOT

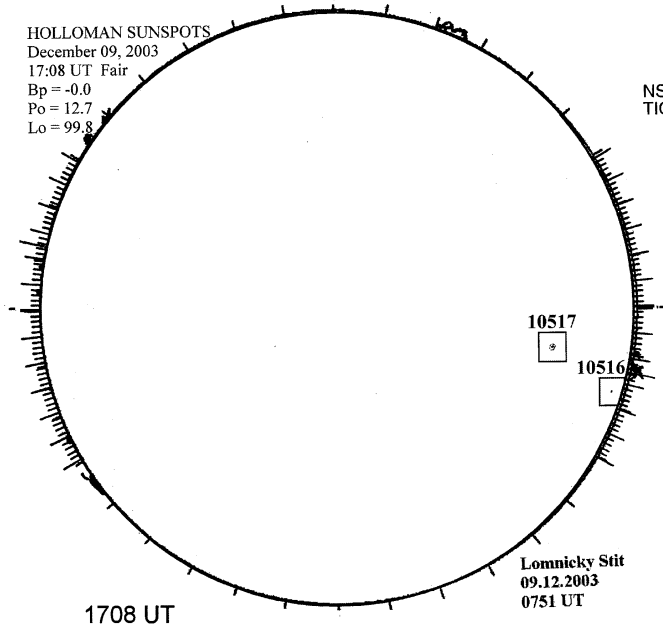

1708 UT
0751 UT LOMN Prom S

SACRAMENTO PEAK CORONA (1.15 Radii)

NSO / SACRAMENTO PEAK CORONAL DATA
TICK MARKS EVERY 10 MILLIONTHS

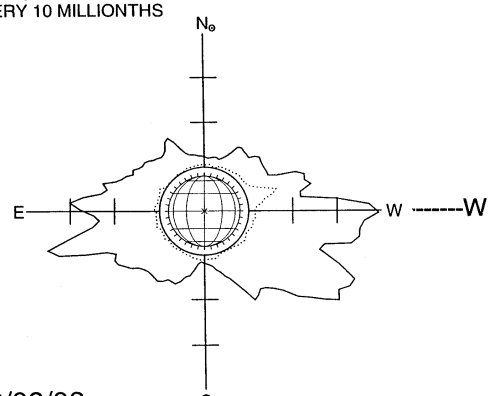

12/09/03
(DOY 343)

FE XIV 20:10 UT 1.15 R⊙
FE X 21:33 UT 1.15 R⊙
xxxxx CA XV 21:04 UT 1.15 R⊙
NO CA XV ACTIVITY TODAY

S