DECEMBER 5, 2003 (P= 14.70, Bo = 0.43, Lo = 160.29)

KITT PEAK MAGNETOGRAM--SOLIS

630.2 nm

Bright = +
Dark = -

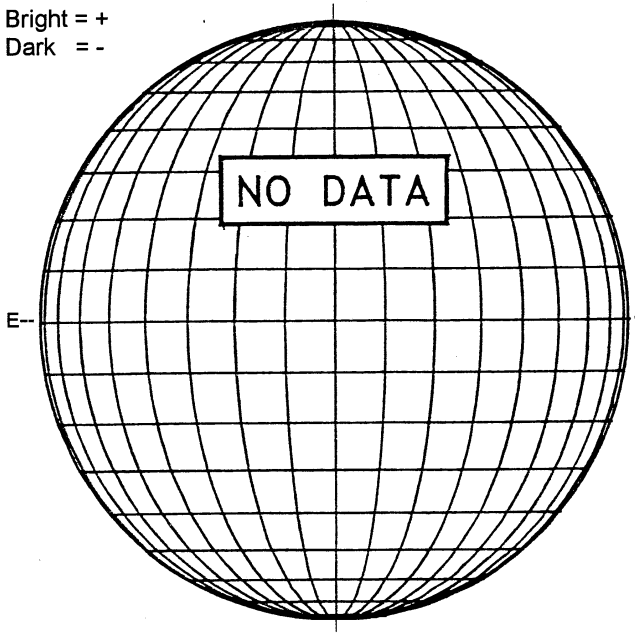

STANFORD MAGNETOGRAM

Solid = +
Dashed = -

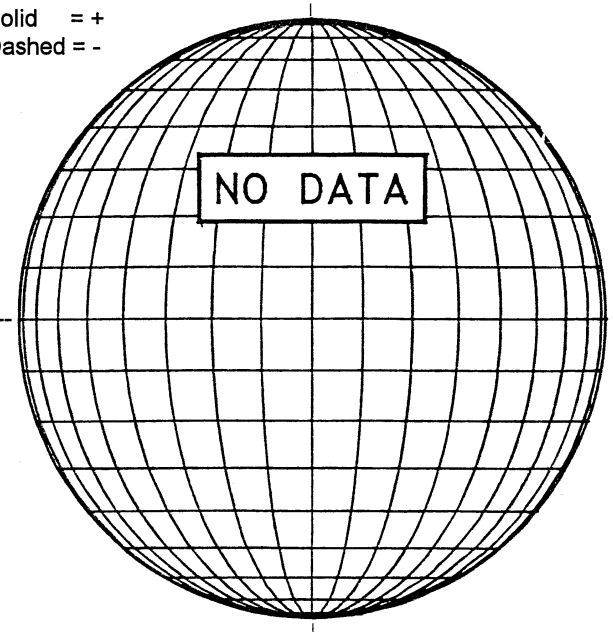

MT. WILSON MAGNETOGRAM

DeltaY =
DeltaX =

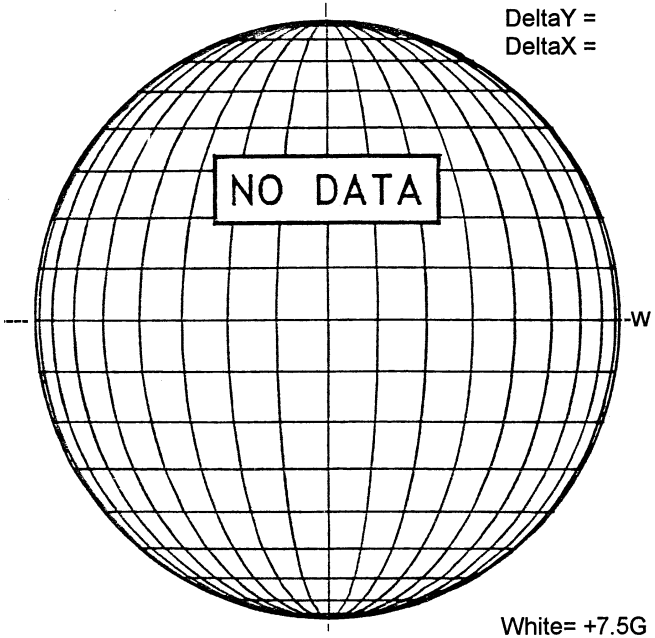

White= +7.5G
Black = -7.5G

KANZELHOHE H-ALPHA

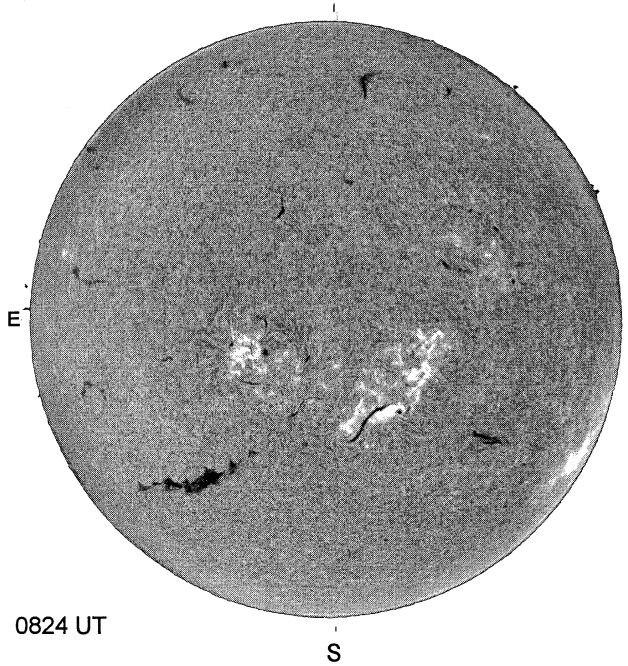

0824 UT

HOLLOMAN SUNSPOT

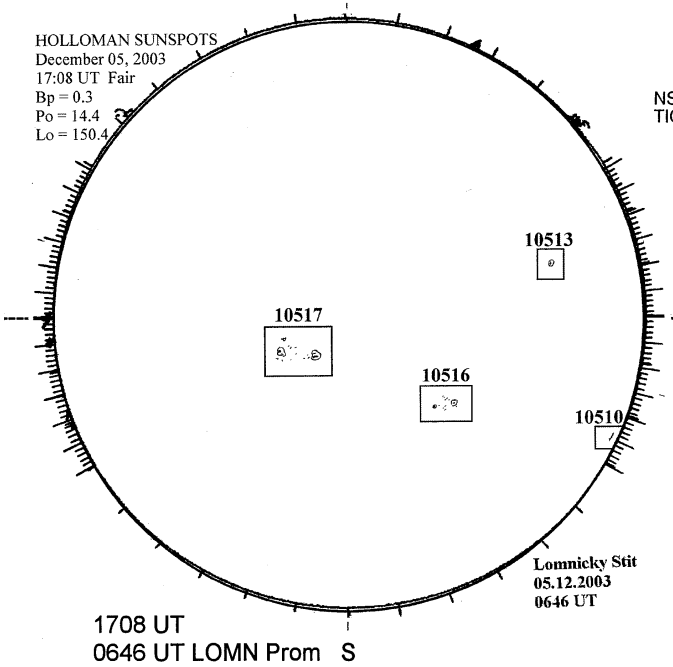

1708 UT
0646 UT LOMN Prom

SACRAMENTO PEAK CORONA (1.15 Radii)

NSO / SACRAMENTO PEAK CORONAL DATA
TICK MARKS EVERY 10 MILLIONTHS

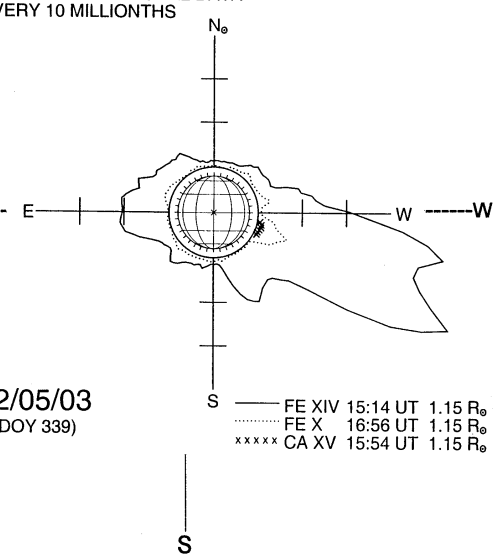

12/05/03
(DOY 339)