DECEMBER 4, 2003 (P= 15.10, Bo = 0.56, Lo = 173.46)

KITT PEAK MAGNETOGRAM--SOLIS

630.2 nm

Bright = +
Dark = -

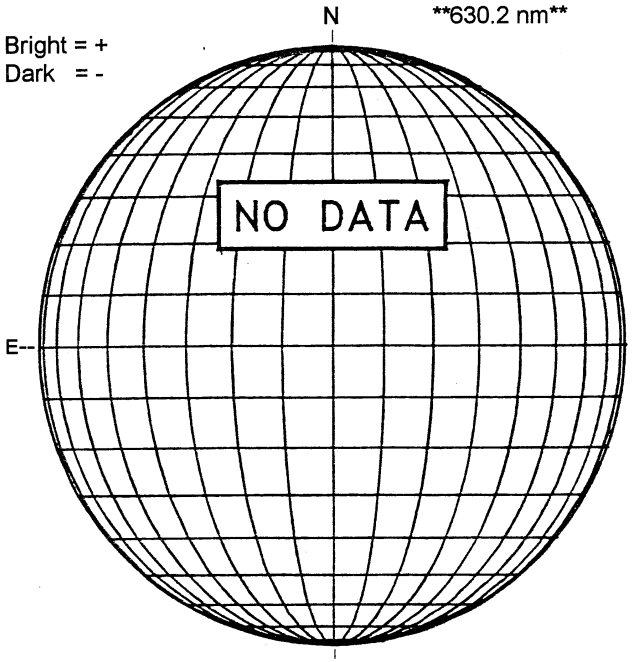

STANFORD MAGNETOGRAM

Solid = +
Dashed = -

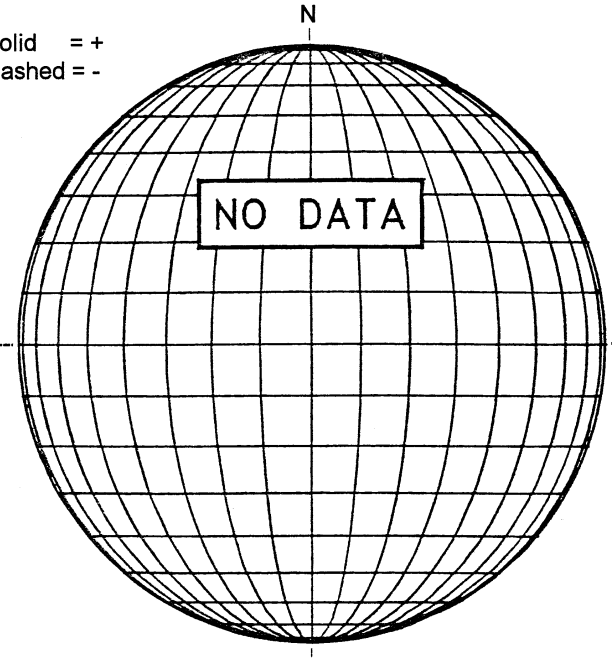

MT. WILSON MAGNETOGRAM

DeltaY = 13.1
DeltaX = 9.6

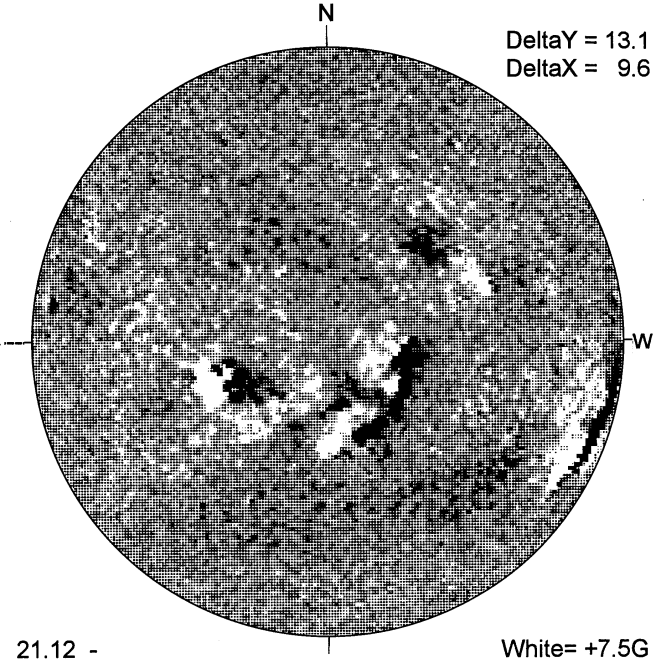

21.12 -
22.10 UT

White= +7.5G
Black = -7.5G

BIG BEAR H-ALPHA

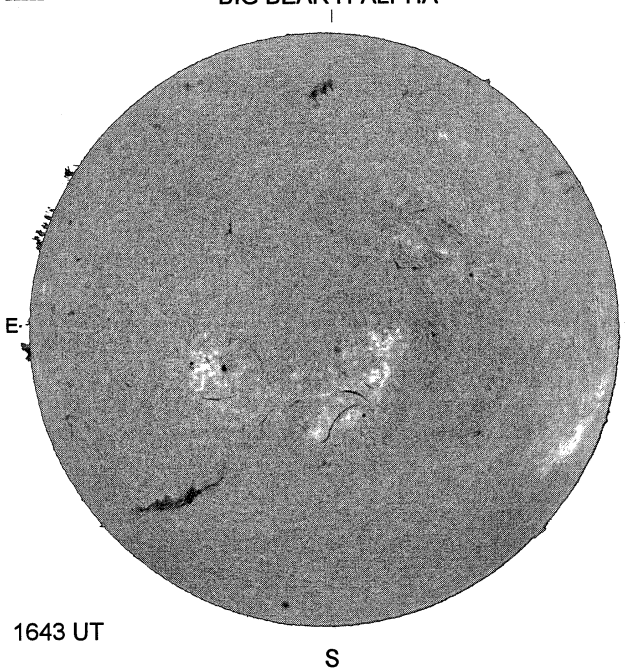

1643 UT

HOLLOMAN SUNSPOT

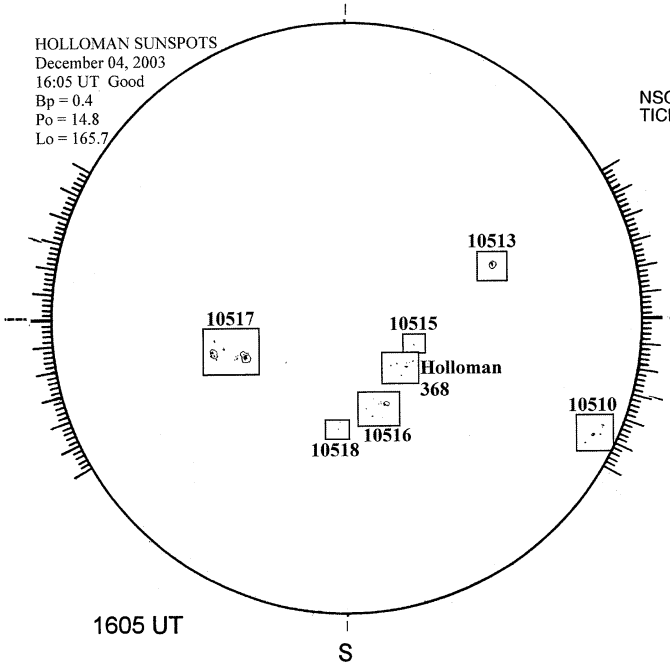

1605 UT

SACRAMENTO PEAK CORONA (1.15 Radii)----

NSO / SACRAMENTO PEAK CORONAL DATA
TICK MARKS EVERY 10 MILLIONTHS

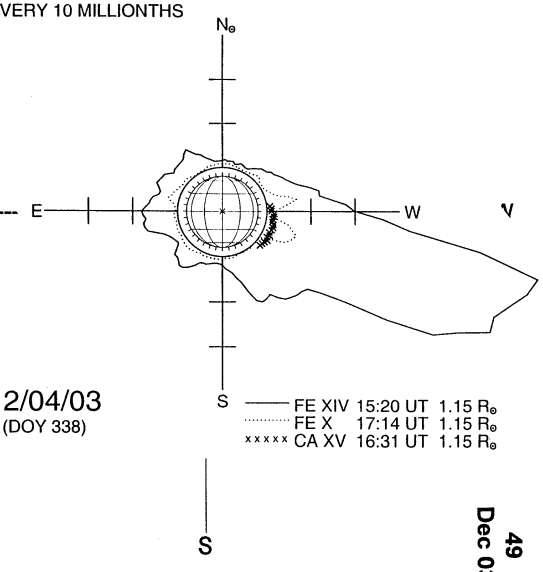

12/04/03
(DOY 338)