DECEMBER 1, 2003 (P= 16.27, Bo = 0.94, Lo = 213.00)

KITT PEAK MAGNETOGRAM--SOLIS

854.2 nm

Bright = +
Dark = -

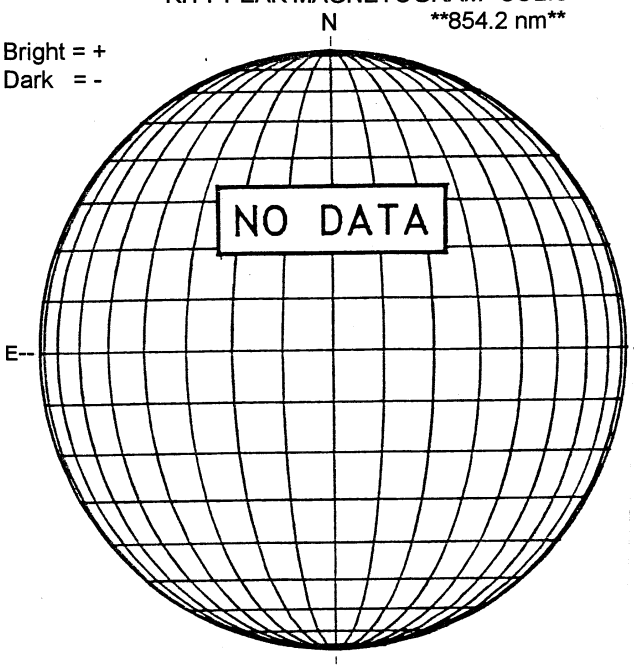

STANFORD MAGNETOGRAM

Solid = +
Dashed = -

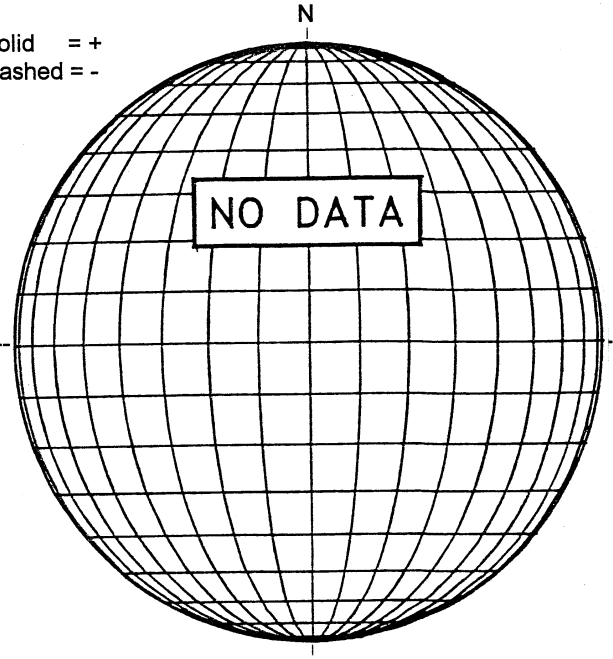

MT. WILSON MAGNETOGRAM

DeltaY =
DeltaX =

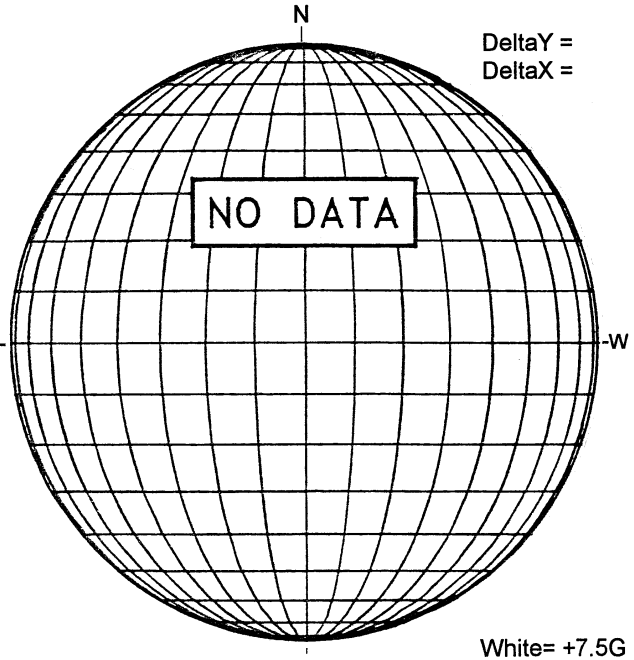

White= +7.5G
Black = -7.5G

BIG BEAR H-ALPHA

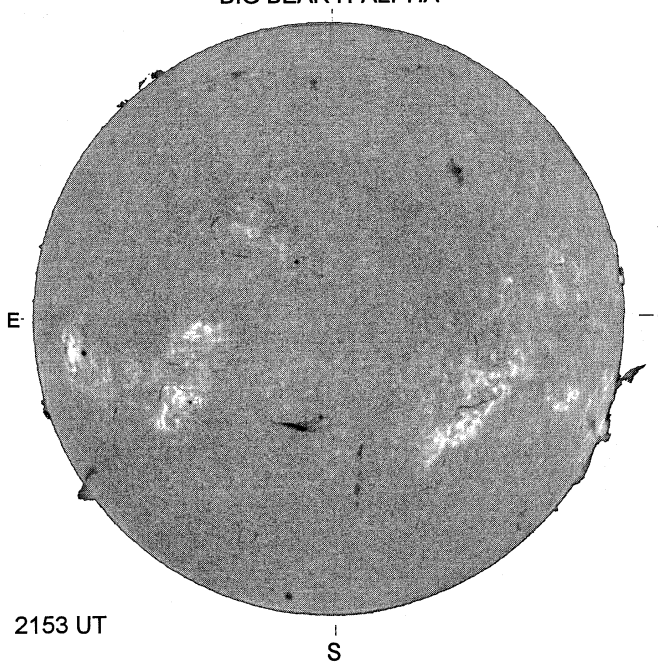

2153 UT

HOLLOMAN SUNSPOT

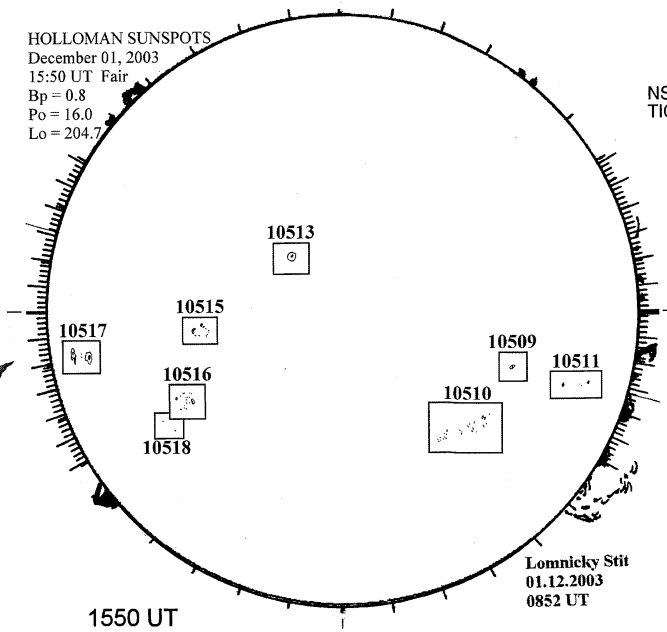

1550 UT
0852 UT LOMN Prom S

SACRAMENTO PEAK CORONA (1.15 Radii)----

NSO / SACRAMENTO PEAK CORONAL DATA
TICK MARKS EVERY 10 MILLIONTHS

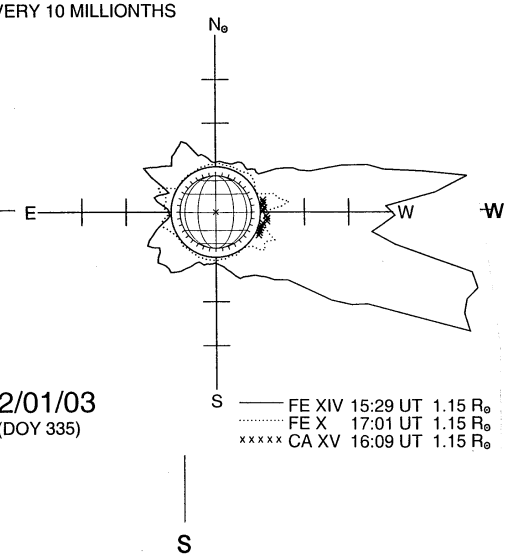

12/01/03
(DOY 335)

S