NOVEMBER 26, 2003 (P= 18.10, Bo = 1.57, Lo = 278.90)

KITT PEAK MAGNETOGRAM--SOLIS

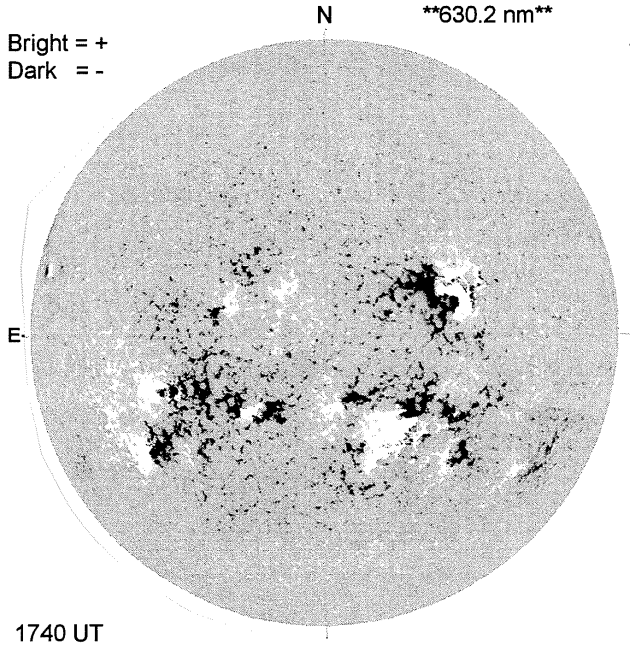

STANFORD MAGNETOGRAM

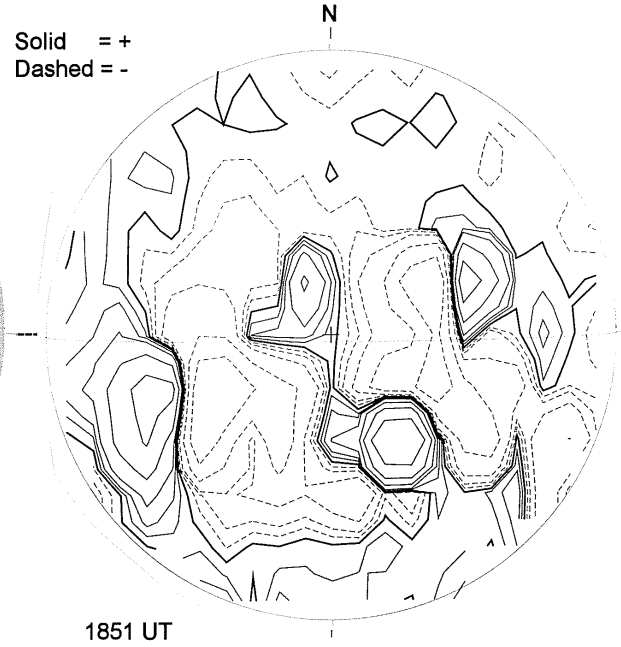

MT. WILSON MAGNETOGRAM

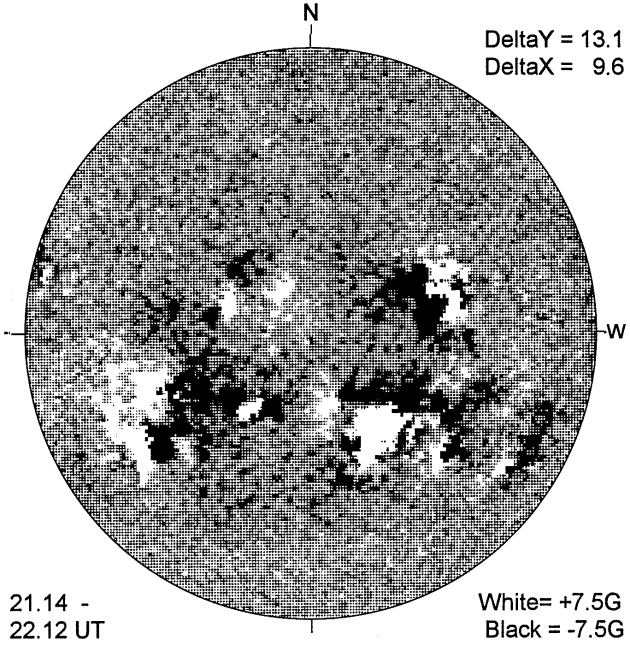

BIG BEAR H-ALPHA

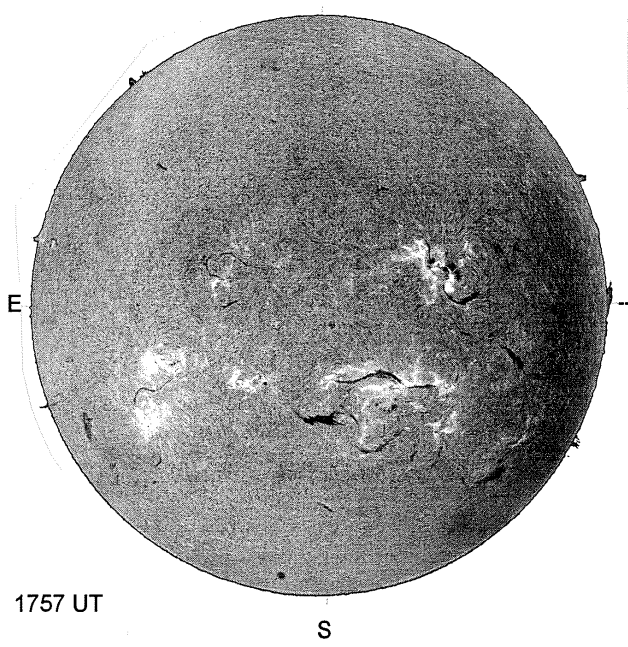

LEARMONTH SUNSPOT

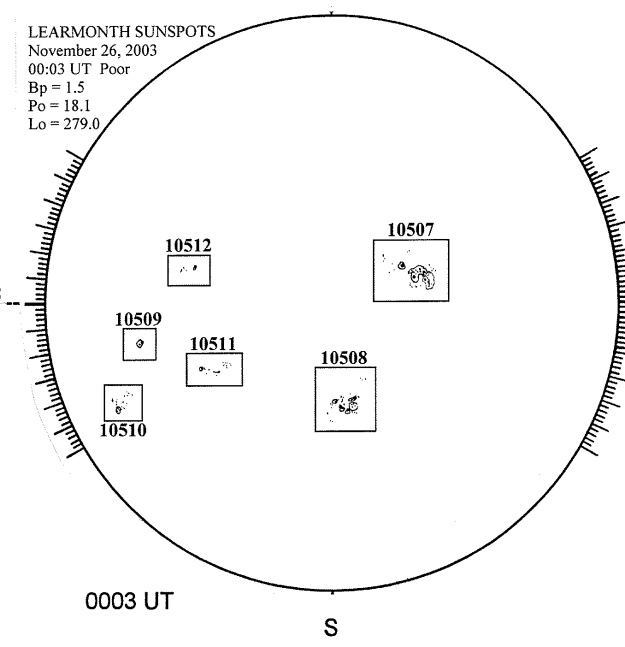
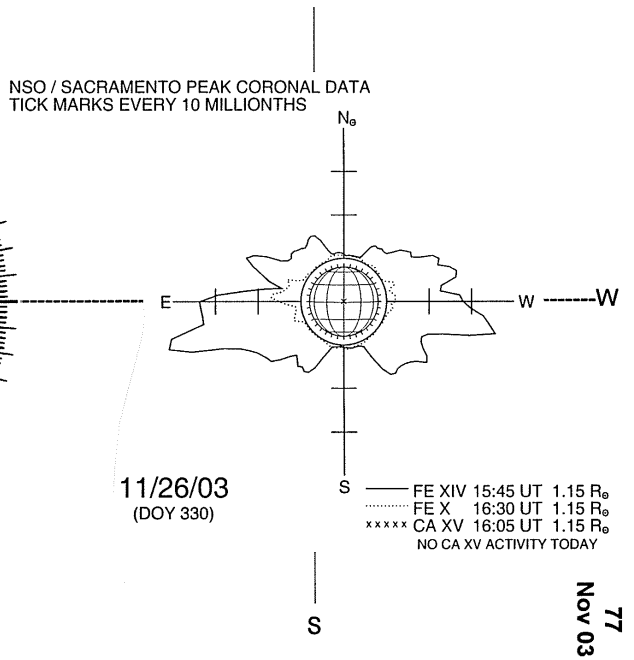
SACRAMENTO PEAK CORONA (1.15 Radii)----