NOVEMBER 24, 2003 (P= 18.79, Bo = 1.81, Lo = 305.26)

KITT PEAK MAGNETOGRAM--SOLIS

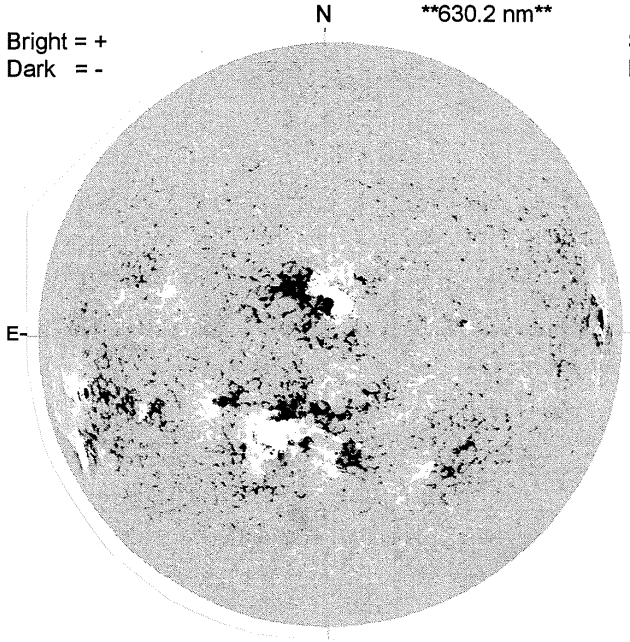

STANFORD MAGNETOGRAM

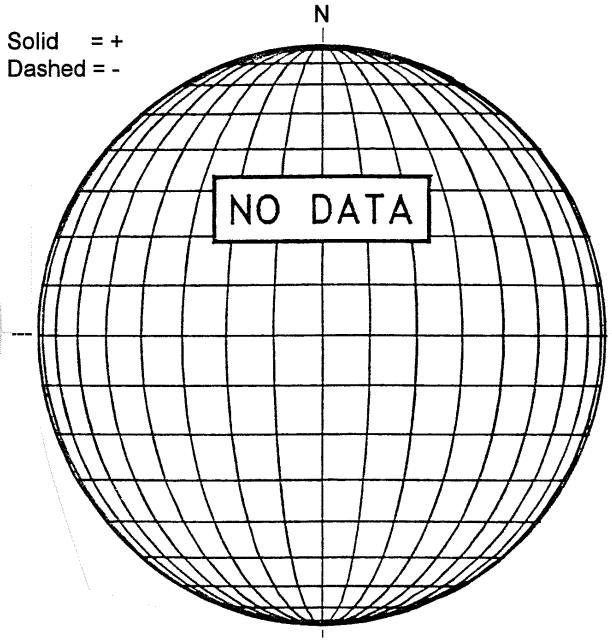

MT. WILSON MAGNETOGRAM

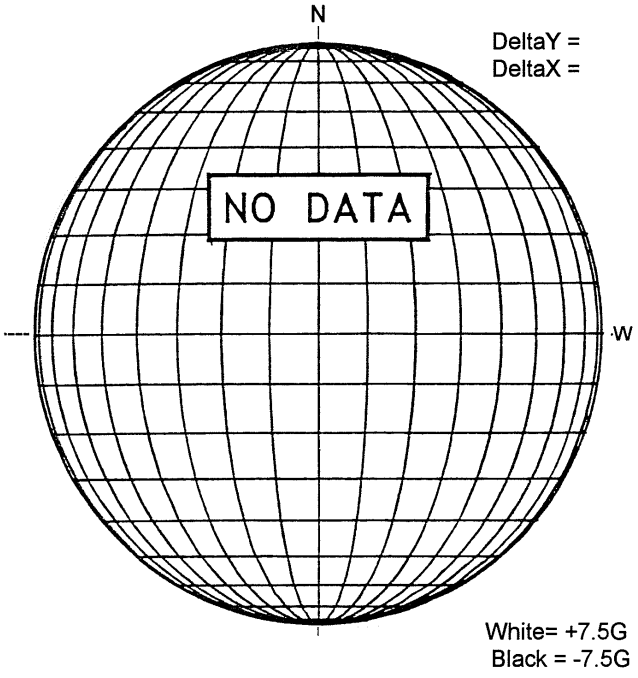

KANZELHOHE H-ALPHA

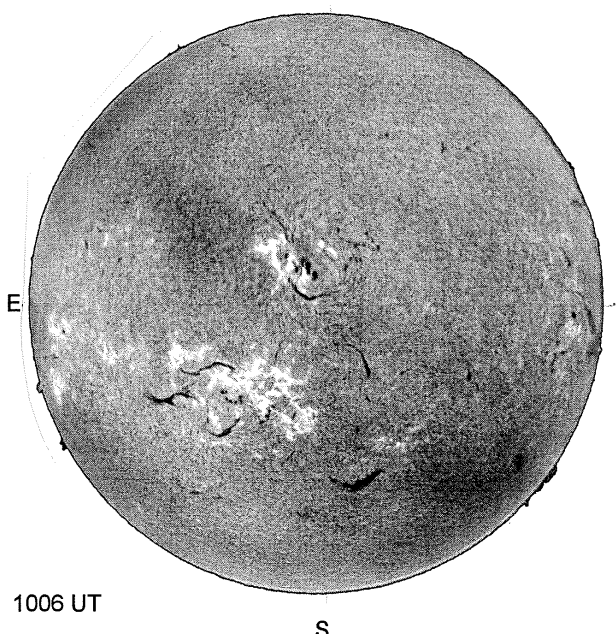

SAN VITO SUNSPOT

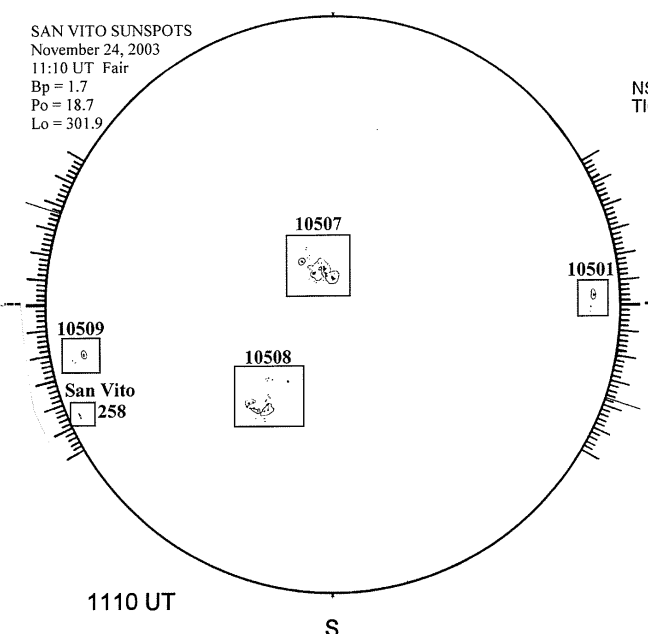
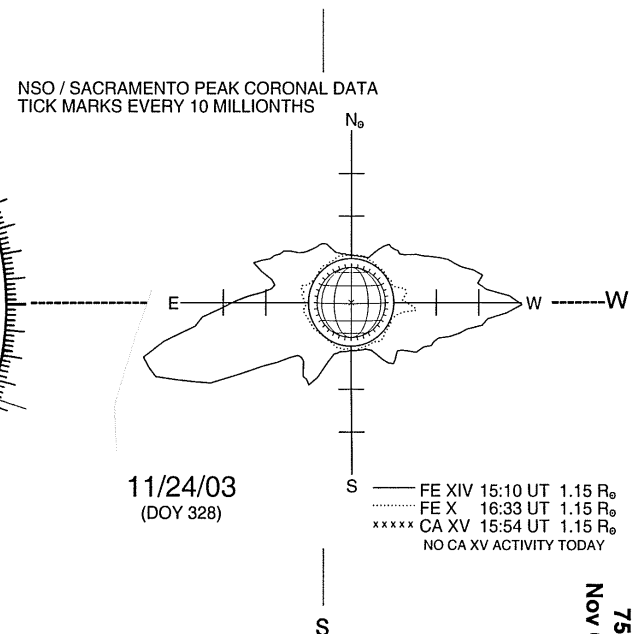
SACRAMENTO PEAK CORONA (1.15 Radii)----