NOVEMBER 20, 2003 (P= 20.08, Bo = 2.30, Lo = 357.98)

KITT PEAK MAGNETOGRAM--SOLIS

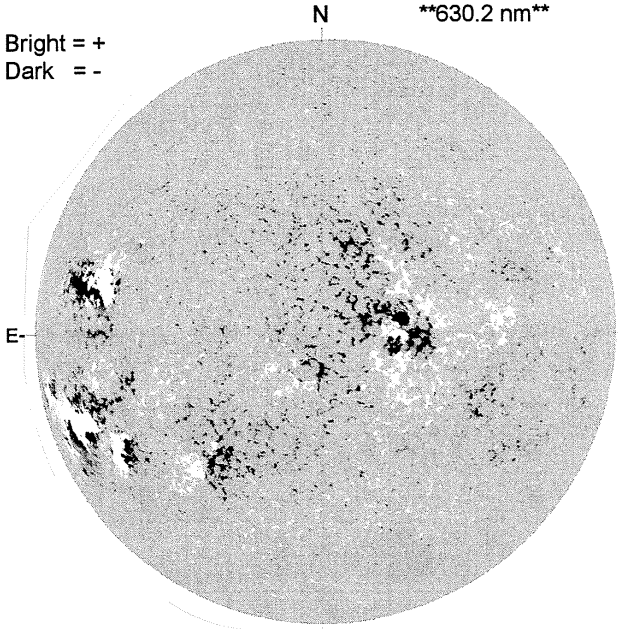

STANFORD MAGNETOGRAM

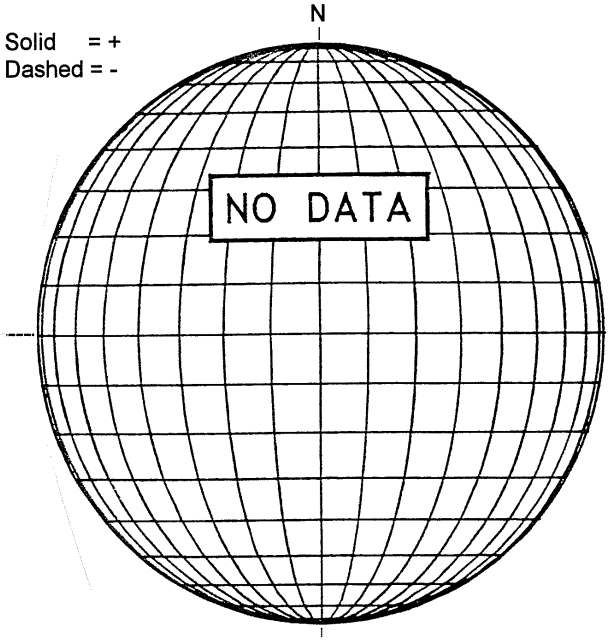

MT. WILSON MAGNETOGRAM

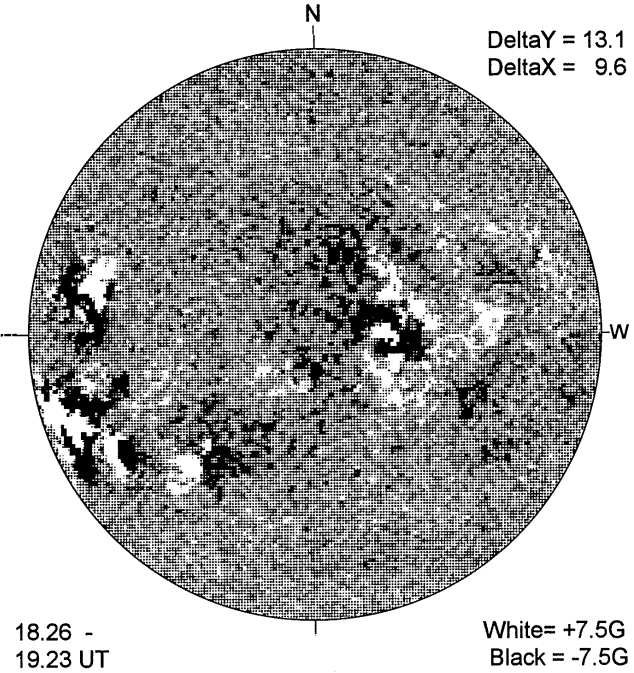

KANZELHOHE H-ALPHA

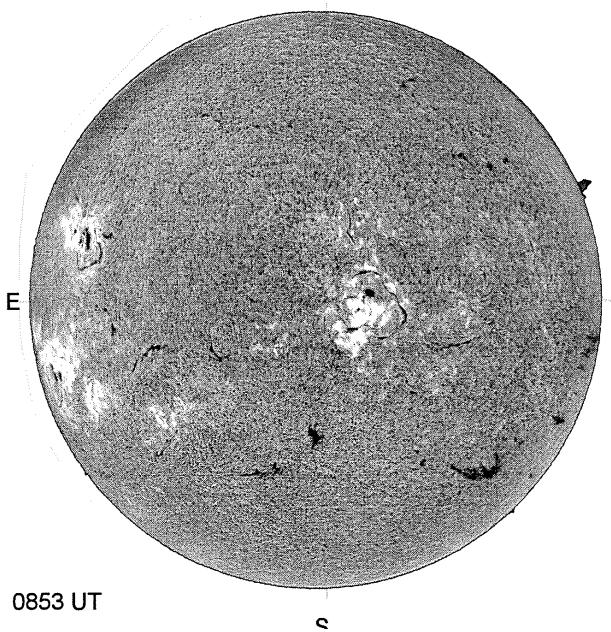

LEARMONTH SUNSPOT

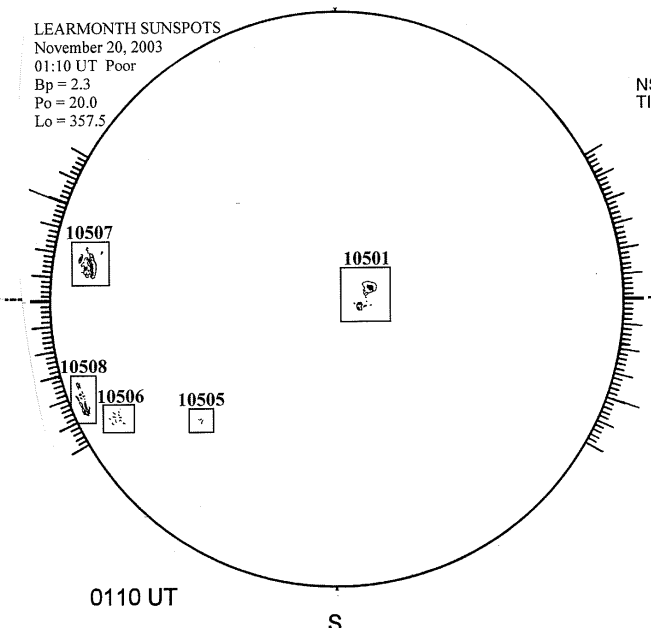
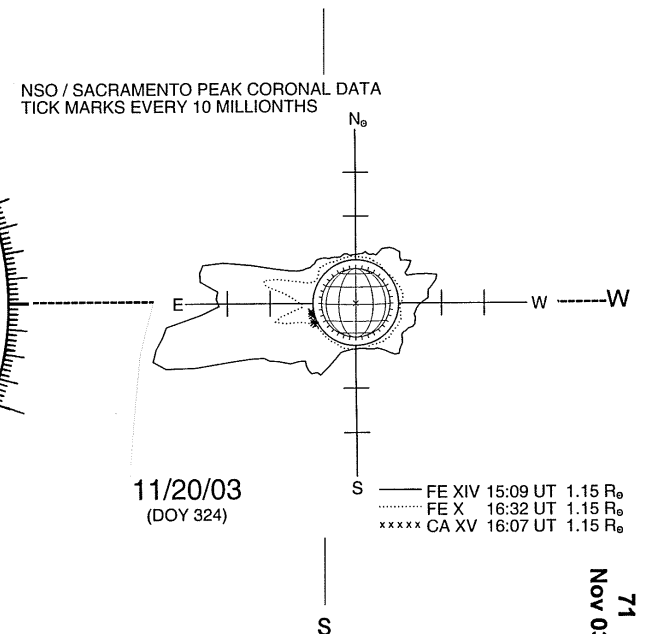
SACRAMENTO PEAK CORONA (1.15 Radii)