NOVEMBER 19, 2003 (P= 20.39, Bo = 2.42, Lo = 11.16)

KITT PEAK MAGNETOGRAM--SOLIS

630.2 nm

Bright = +
Dark = -

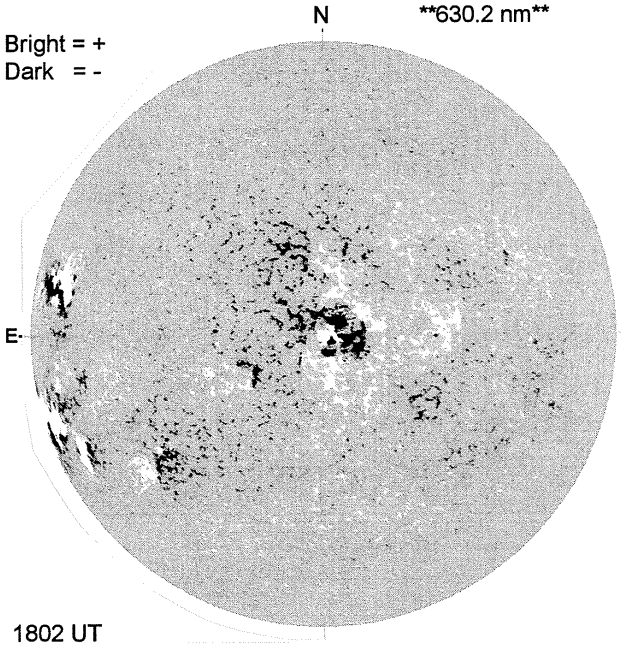

1802 UT

STANFORD MAGNETOGRAM

Solid = +
Dashed = -

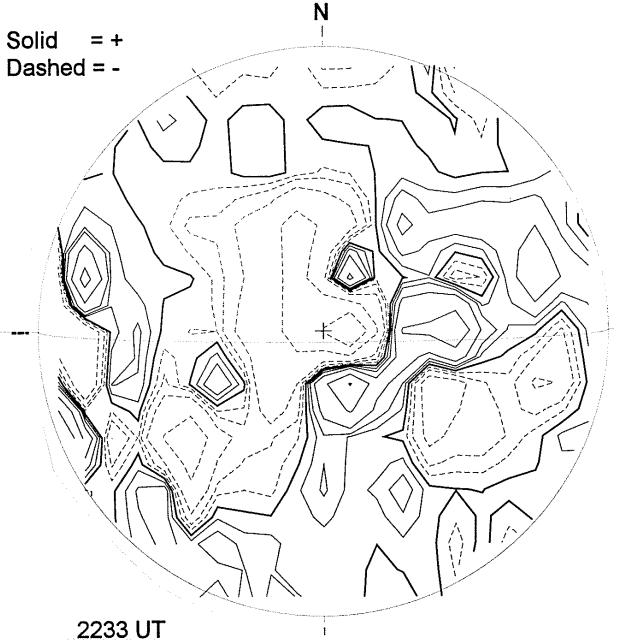

2233 UT

MT. WILSON MAGNETOGRAM

DeltaY =
DeltaX =

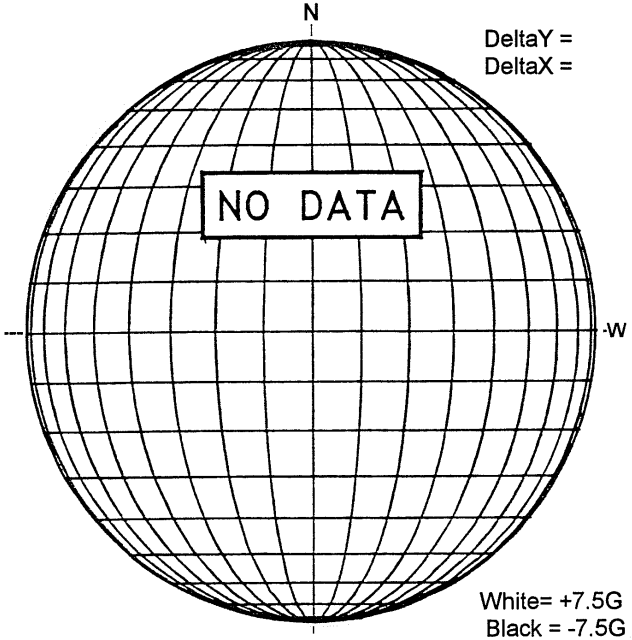

White= +7.5G
Black = -7.5G

KANZELHOHE H-ALPHA

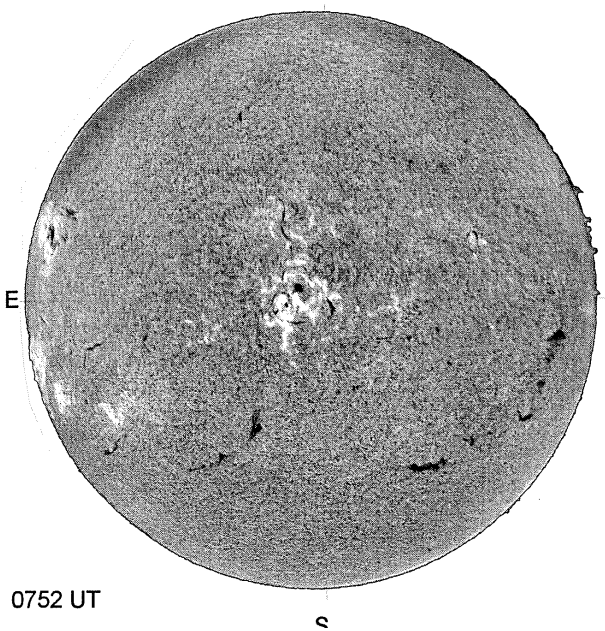

0752 UT

SAN VITO SUNSPOT

SAN VITO SUNSPOTS
November 19, 2003
08:36 UT Fair
Bp = 2.4
Po = 20.3
Lo = 8.3

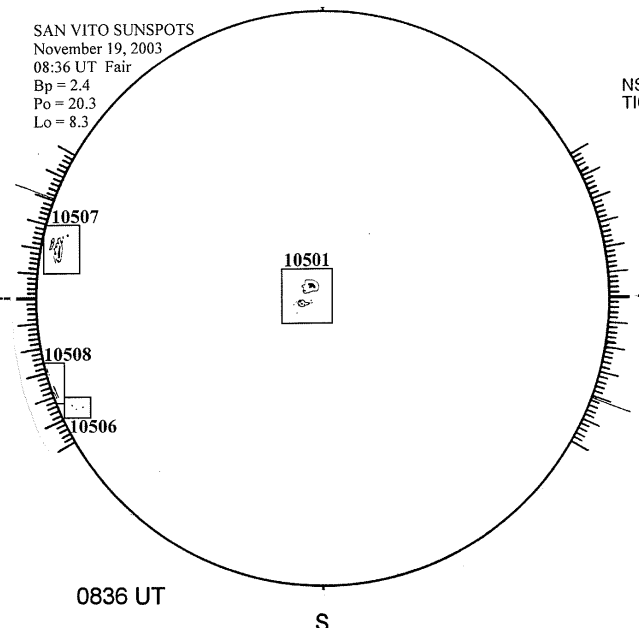

0836 UT

SACRAMENTO PEAK CORONA (1.15 Radii)

NSO / SACRAMENTO PEAK CORONAL DATA
TICK MARKS EVERY 10 MILLIONTHS

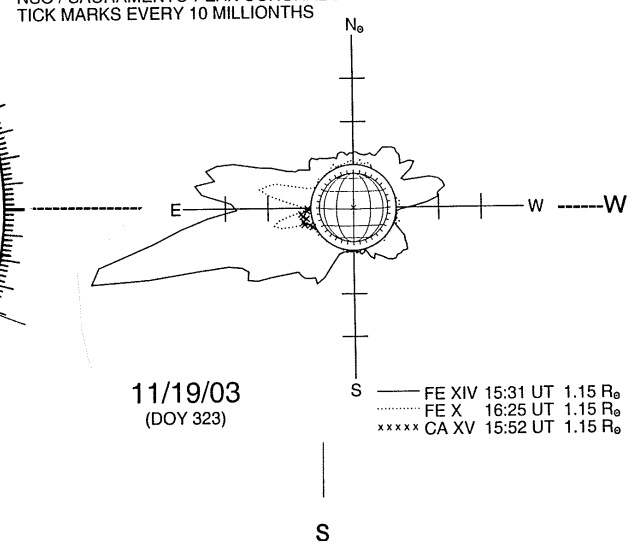

11/19/03
(DOY 323)

FE XIV 15:31 UT 1.15 R☉
FE X 16:25 UT 1.15 R☉
CA XV 15:52 UT 1.15 R☉