NOVEMBER 18, 2003 (P= 20.68, Bo = 2.54, Lo = 24.34)

KITT PEAK MAGNETOGRAM--SOLIS

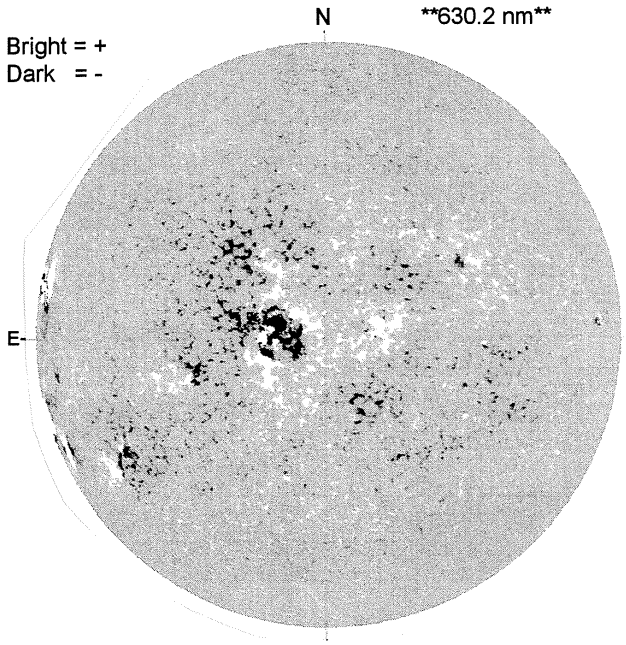

STANFORD MAGNETOGRAM

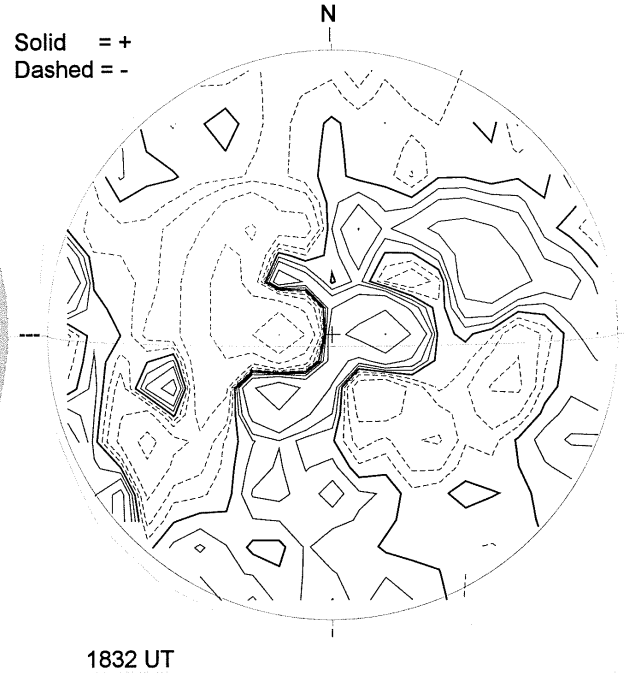

MT. WILSON MAGNETOGRAM

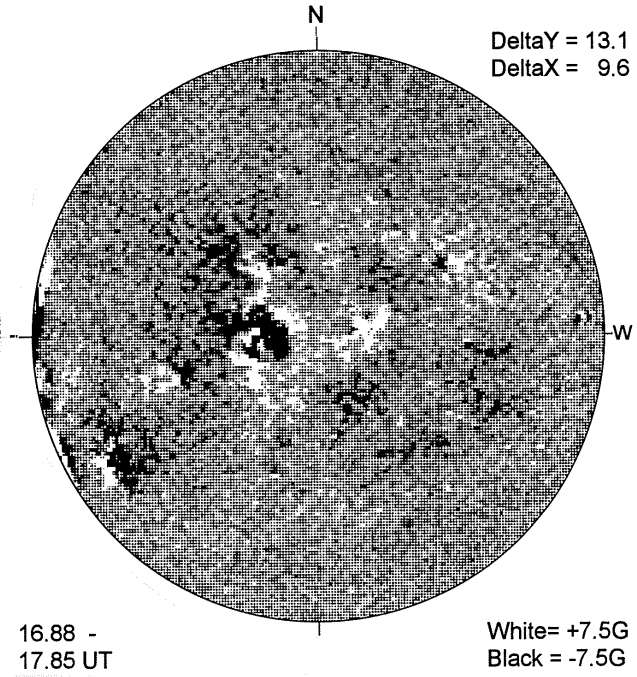

BIG BEAR H-ALPHA

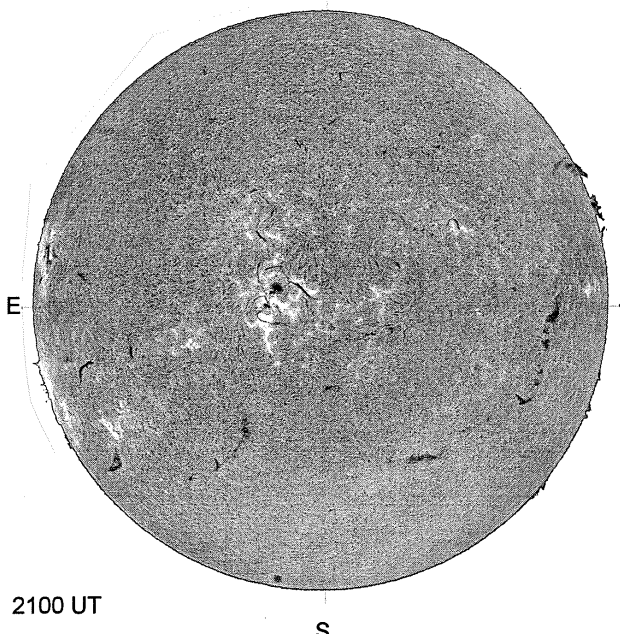

LEARMONTH SUNSPOT

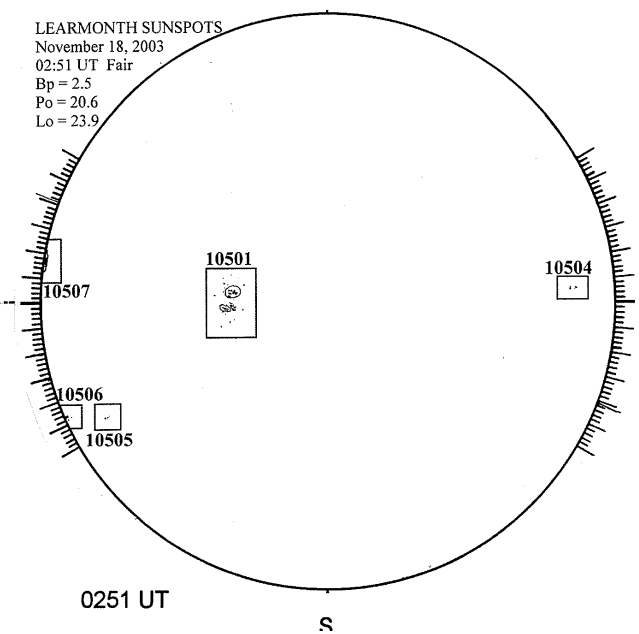
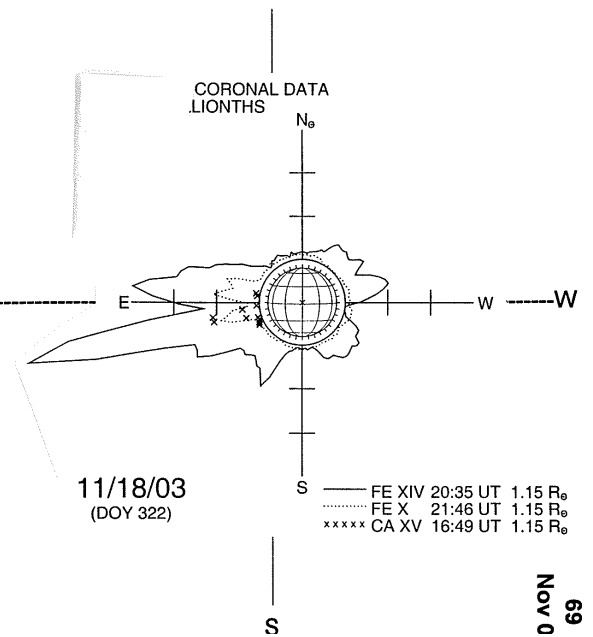
SACRAMENTO PEAK CORONA (1.15 Radii)