NOVEMBER 17, 2003 (P= 20.97, Bo = 2.66, Lo = 37.53)

KITT PEAK MAGNETOGRAM--SOLIS

N **630.2 nm**

Bright = +
Dark = -

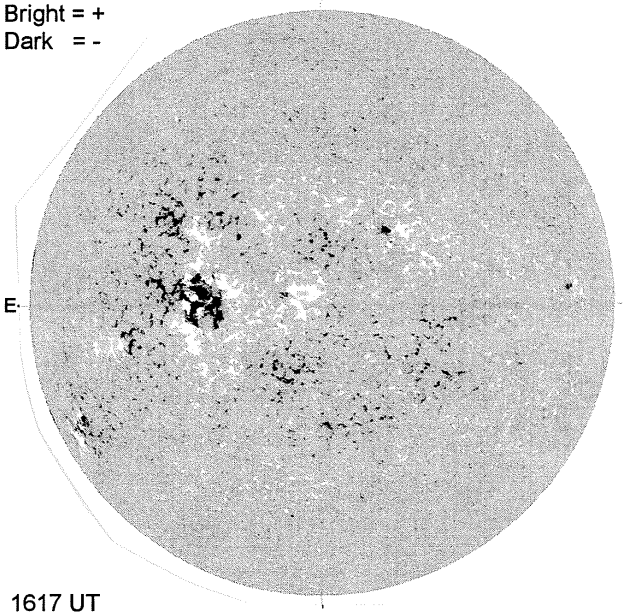

E

1617 UT

STANFORD MAGNETOGRAM

N

Solid = +
Dashed = -

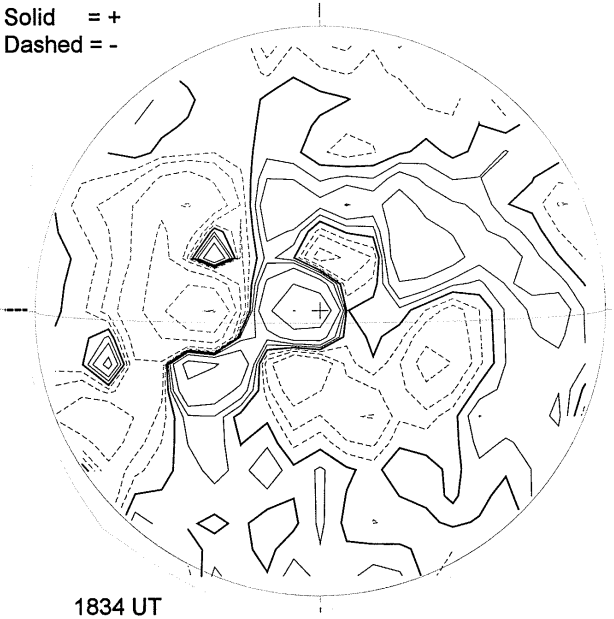

1834 UT

MT. WILSON MAGNETOGRAM

N

DeltaY = 20.2
DeltaX = 13.0

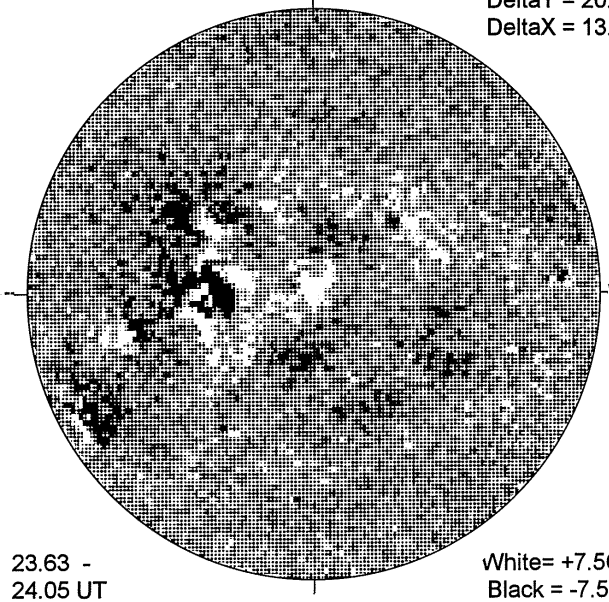

W

23.63 -
24.05 UT

White= +7.5G
Black = -7.5G

MEUDON H-ALPHA

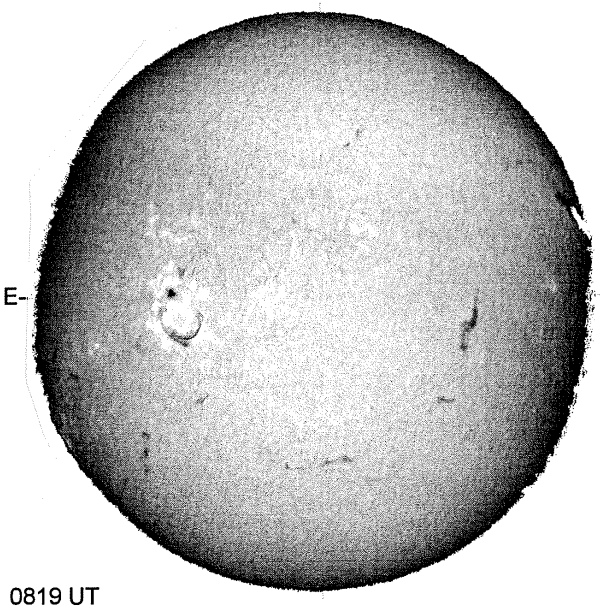

E

0819 UT

S

SAN VITO SUNSPOT

SAN VITO SUNSPOTS
November 17, 2003
08:20 UT Fair
Bp = 2.6
Po = 20.9
Lo = 34.6

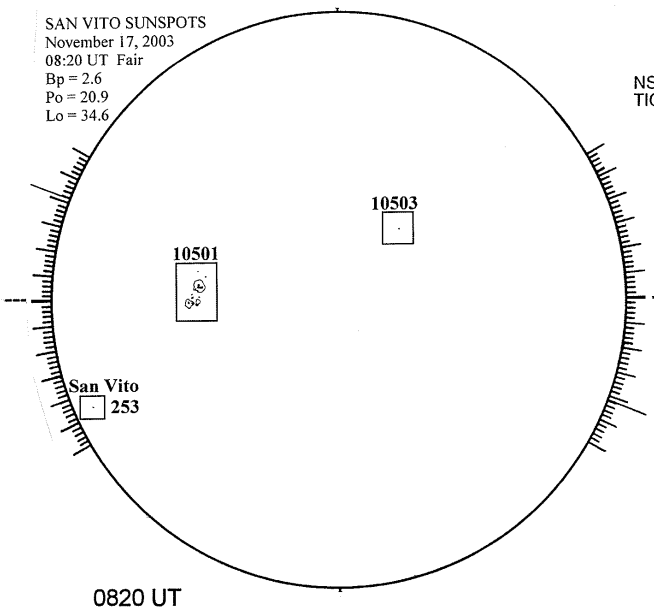

0820 UT

S

SACRAMENTO PEAK CORONA (1.15 Radii)

NSO / SACRAMENTO PEAK CORONAL DATA
TICK MARKS EVERY 10 MILLIONTHS

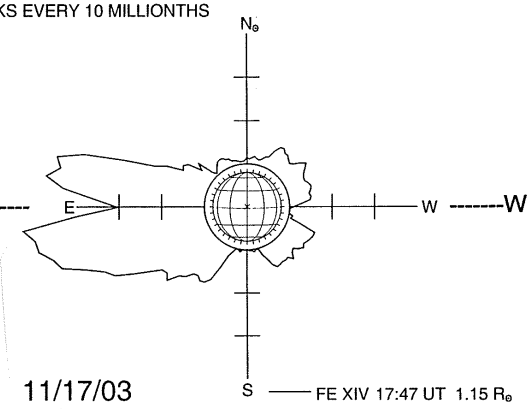

11/17/03
(DOY 321)

FE XIV 17:47 UT 1.15 R⊙

S