NOVEMBER 12, 2003 (P= 22.31, Bo = 3.24, Lo = 103.44)

KITT PEAK MAGNETOGRAM--SOLIS

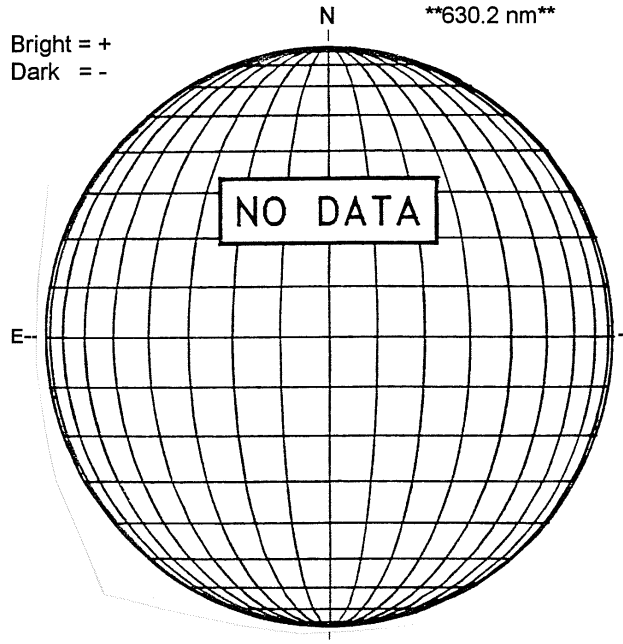

STANFORD MAGNETOGRAM

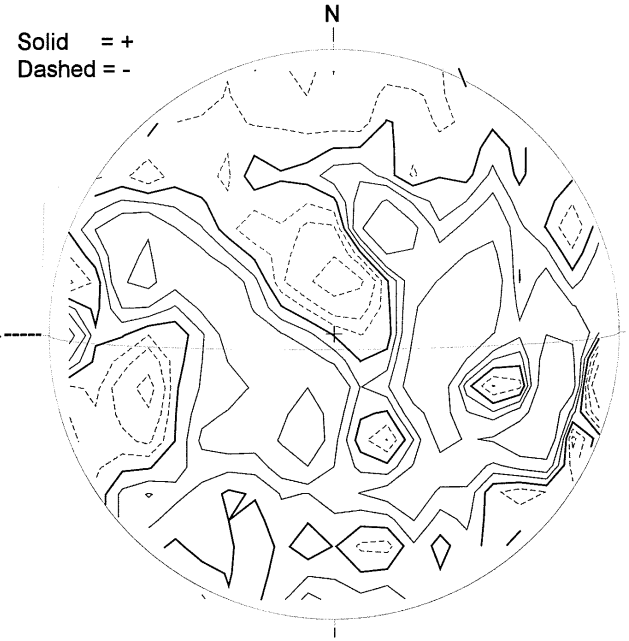

1832 UT

MT. WILSON MAGNETOGRAM

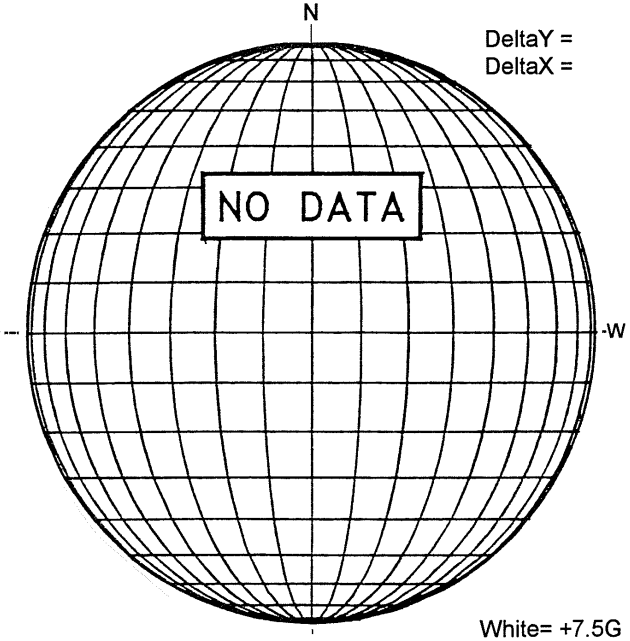

KANZELHOHE H-ALPHA

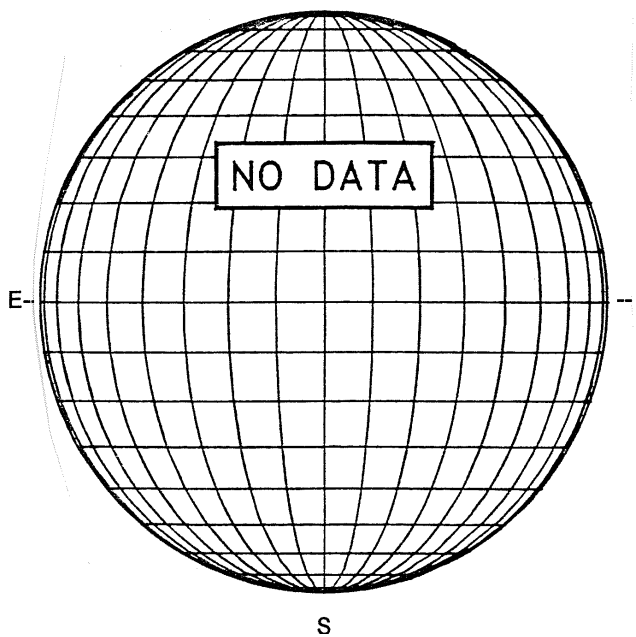

LEARMONTH SUNSPOTS

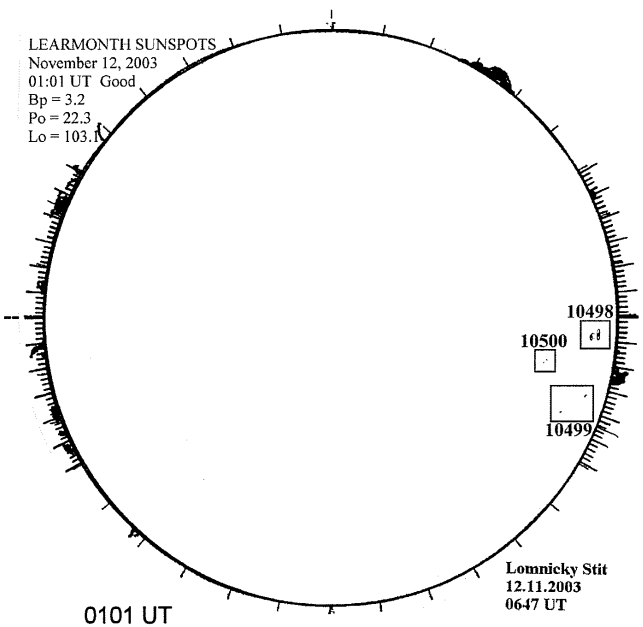

0101 UT
0647 UT LOMN Prom

LOMNICKY PEAK CORONA (1.04 Radii)----

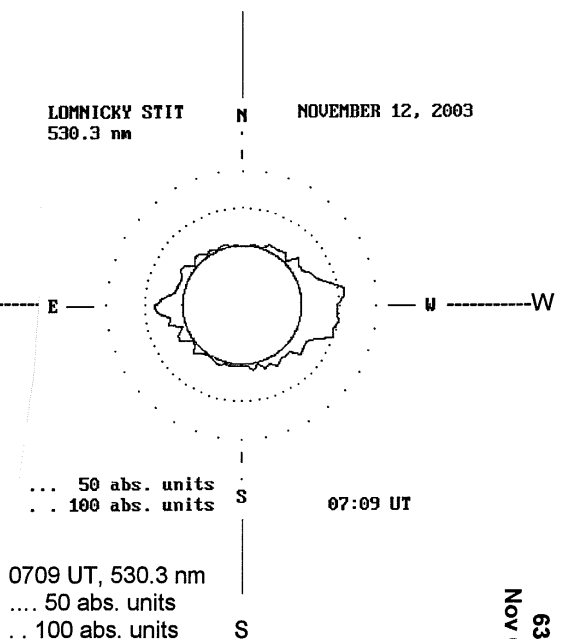

0709 UT, 530.3 nm
.... 50 abs. units
. . 100 abs. units