NOVEMBER 10, 2003 (P= 22.80, Bo = 3.47 Lo = 129.81)

KITT PEAK MAGNETOGRAM--SOLIS

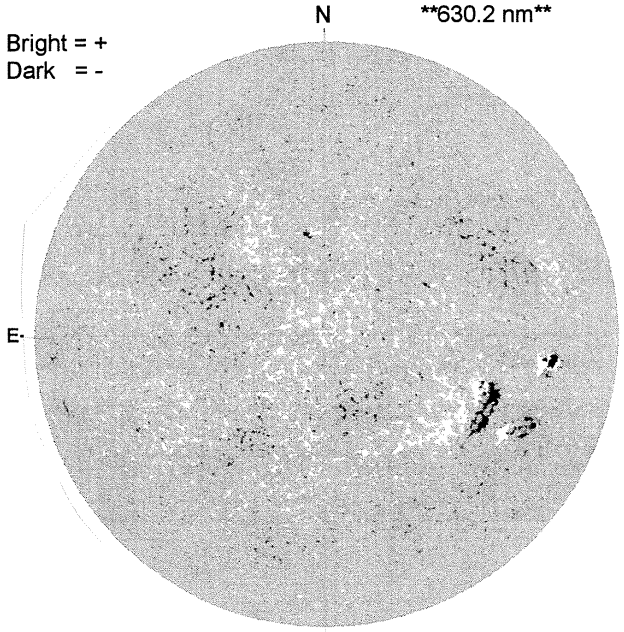

1651 UT

STANFORD MAGNETOGRAM

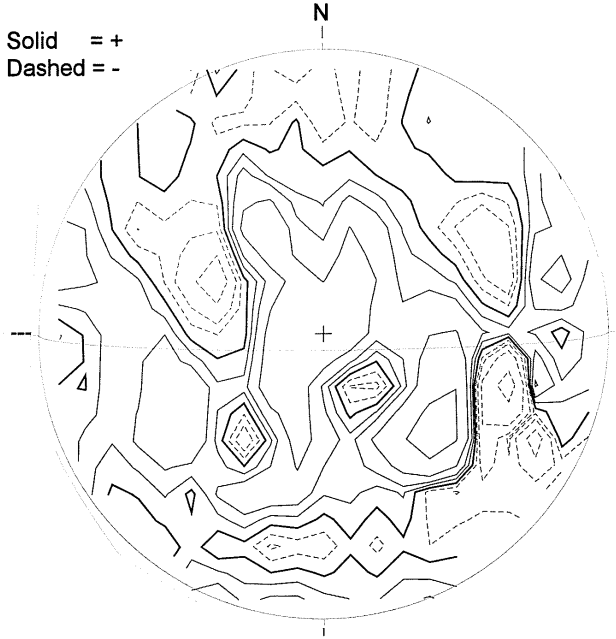

1839 UT

MT. WILSON MAGNETOGRAM

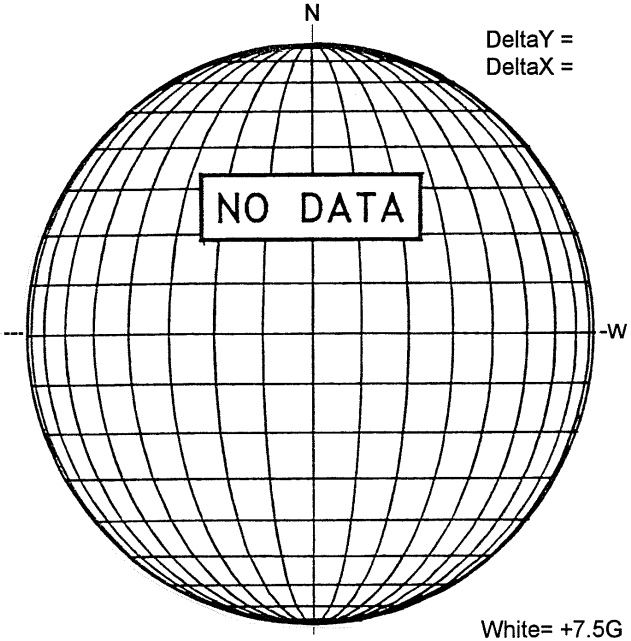

MEUDON H-ALPHA

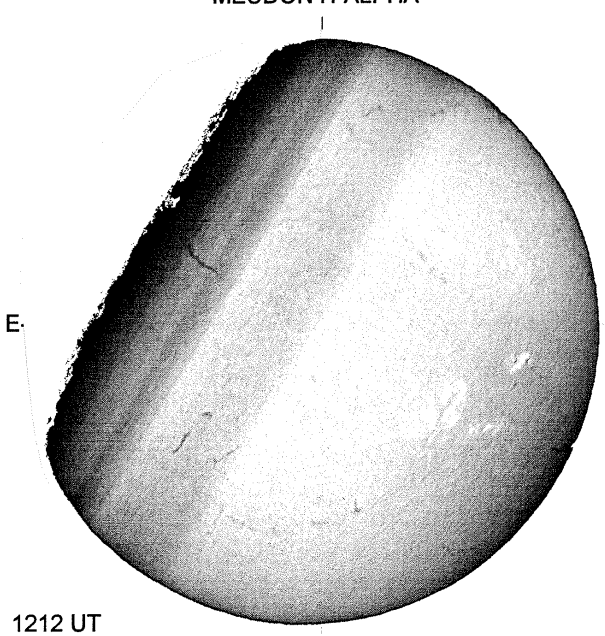

1212 UT

SAN VITO SUNSPOTS

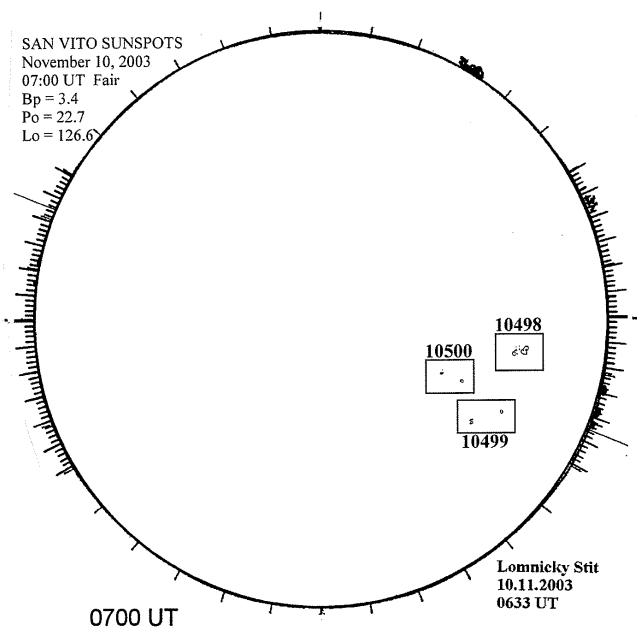

0700 UT
0633 UT LOMN Prom S

SACRAMENTO PEAK CORONA (1.15 Radii)----

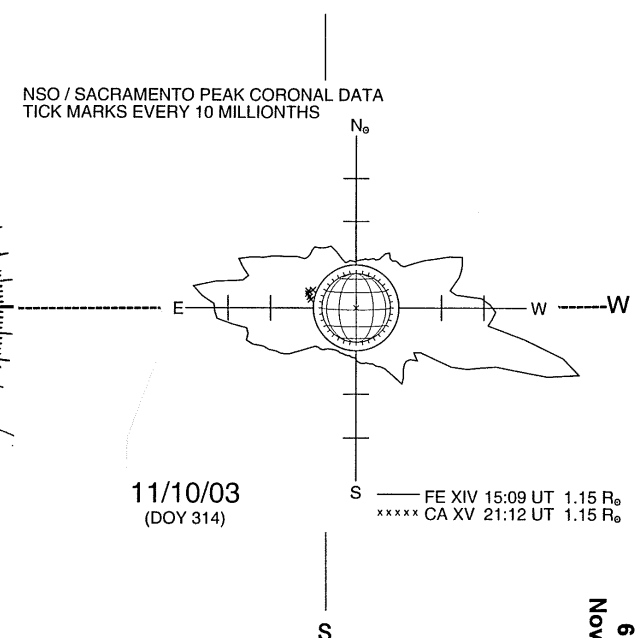

11/10/03
(DOY 314)

NOV 6