NOVEMBER 7, 2003 (P= 23.46, Bo = 3.80, Lo = 169.37)

KITT PEAK MAGNETOGRAM--SOLIS

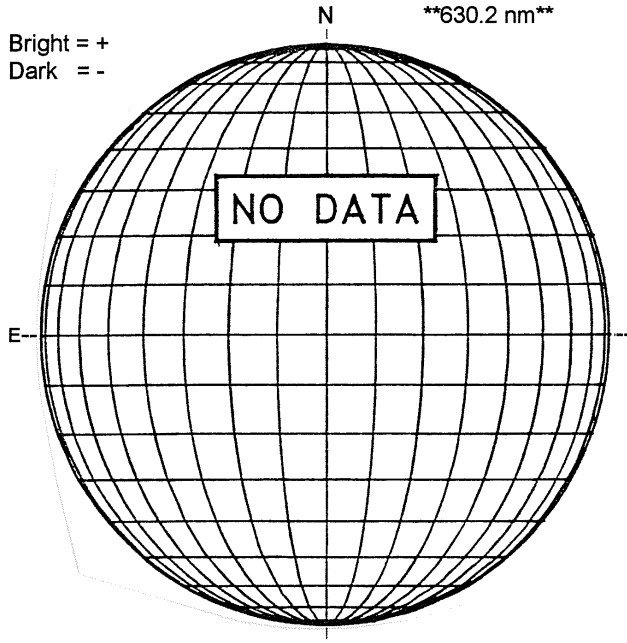

STANFORD MAGNETOGRAM

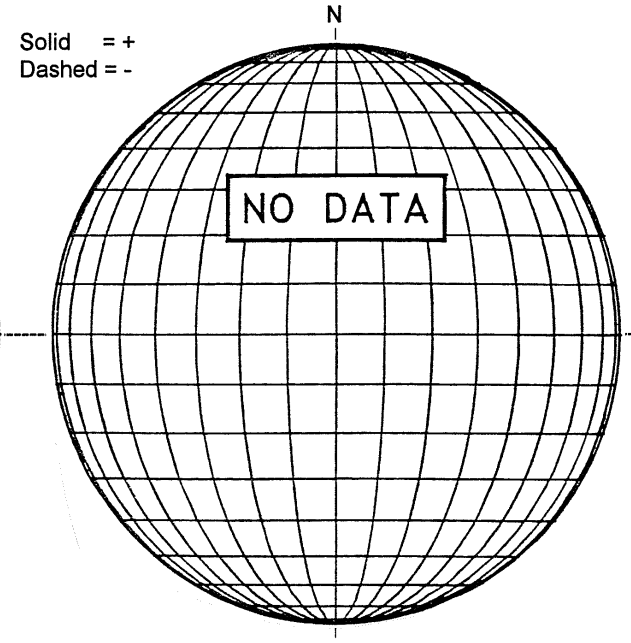

MT. WILSON MAGNETOGRAM

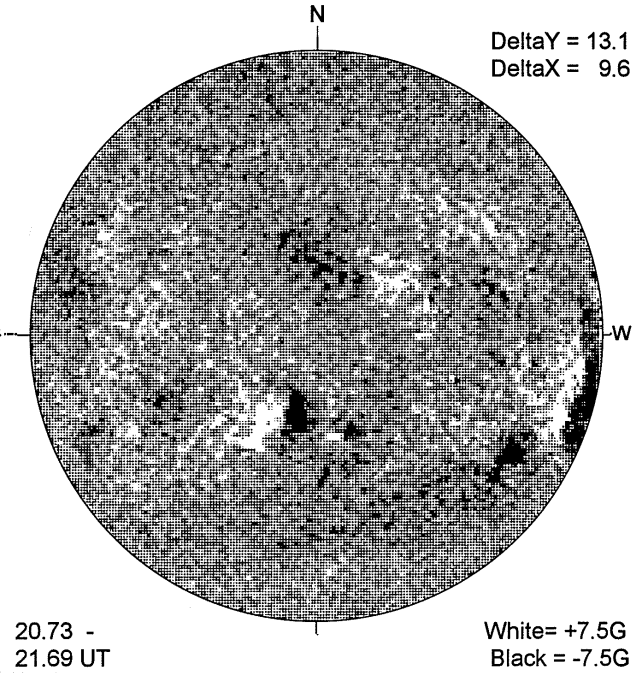

BIG BEAR H-ALPHA

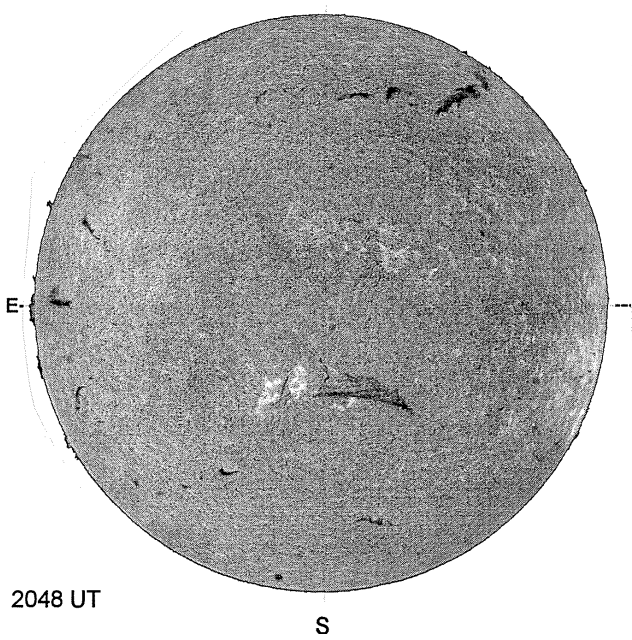

LEARMONTH SUNSPOTS

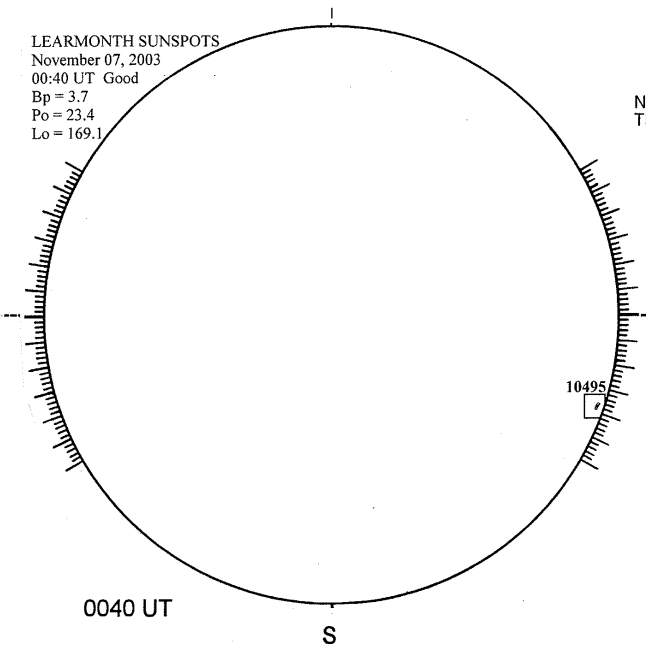
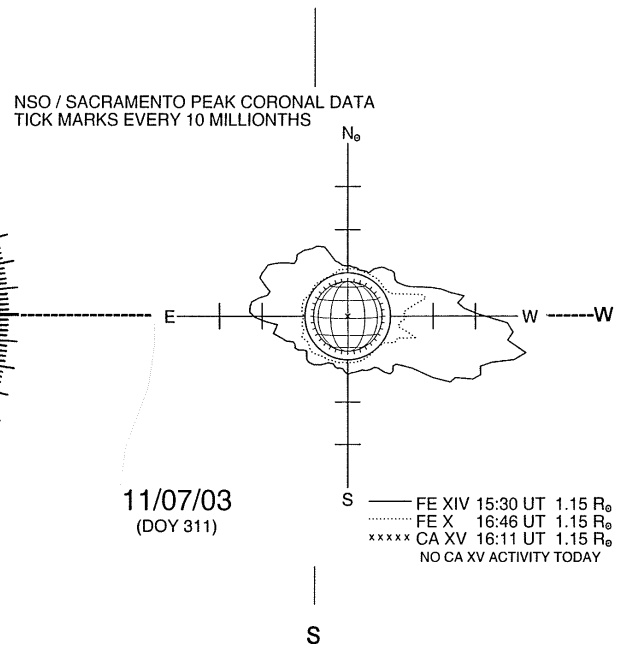
SACRAMENTO PEAK CORONA (1.15 Radii)----