NOVEMBER 6, 2003 (P= 23.67, Bo = 3.91, Lo = 182.55)

KITT PEAK MAGNETOGRAM--SOLIS

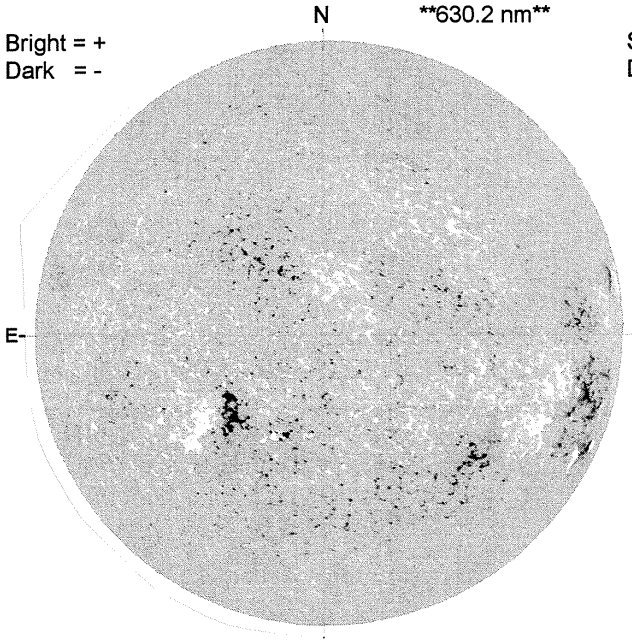

STANFORD MAGNETOGRAM

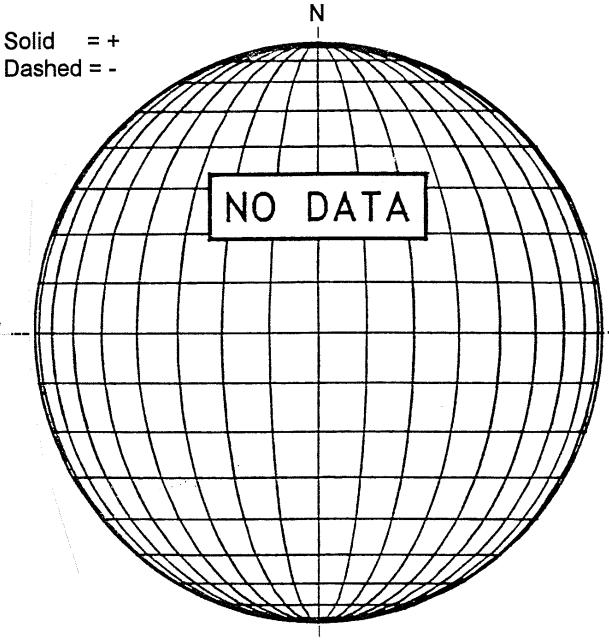

MT. WILSON MAGNETOGRAM

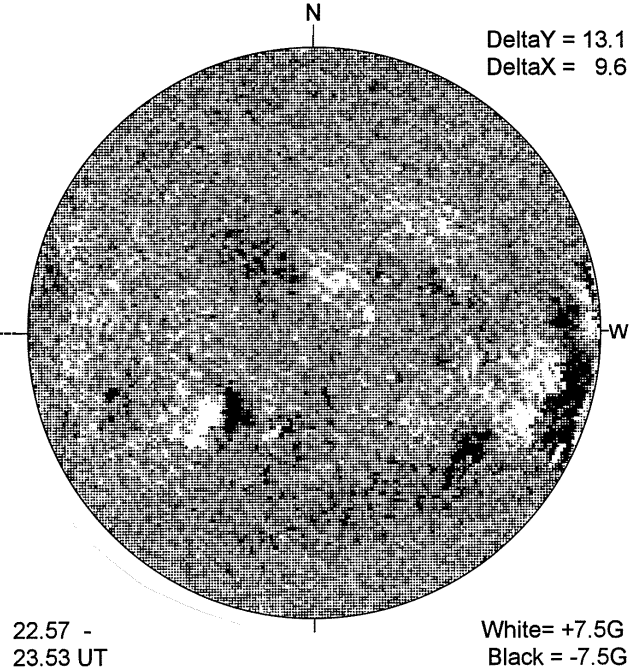

BIG BEAR H-ALPHA

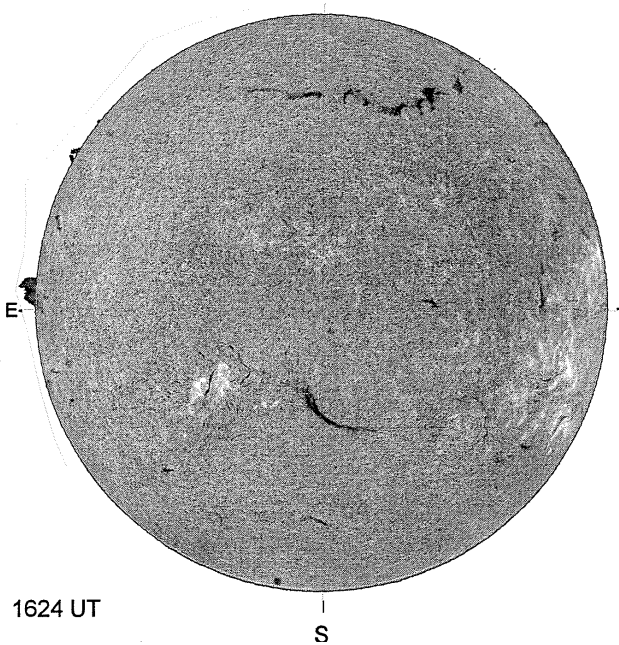

SAN VITO SUNSPOT

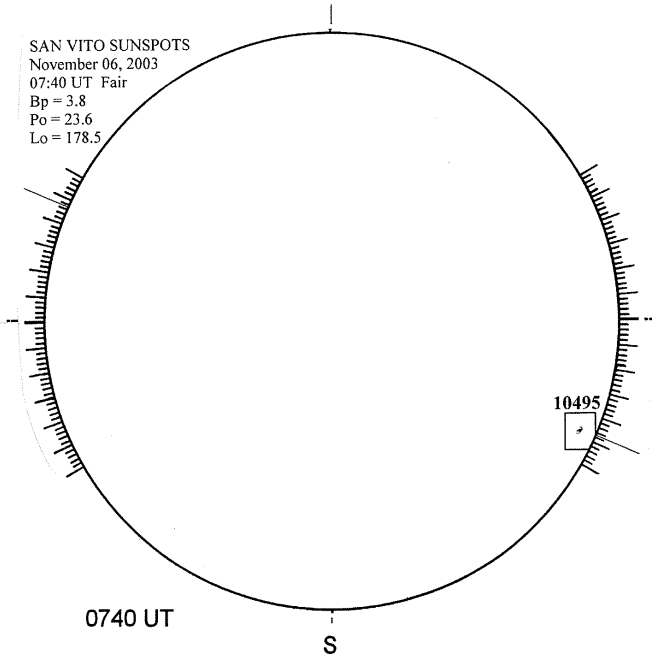
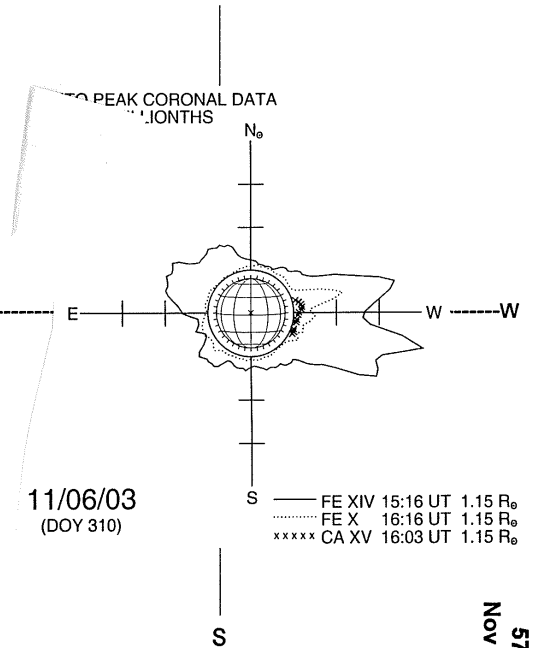
SACRAMENTO PEAK CORONA (1.15 Radii)----