NOVEMBER 5, 2003 (P= 23.86, Bo = 4.01, Lo = 195.74)

KITT PEAK MAGNETOGRAM--SOLIS

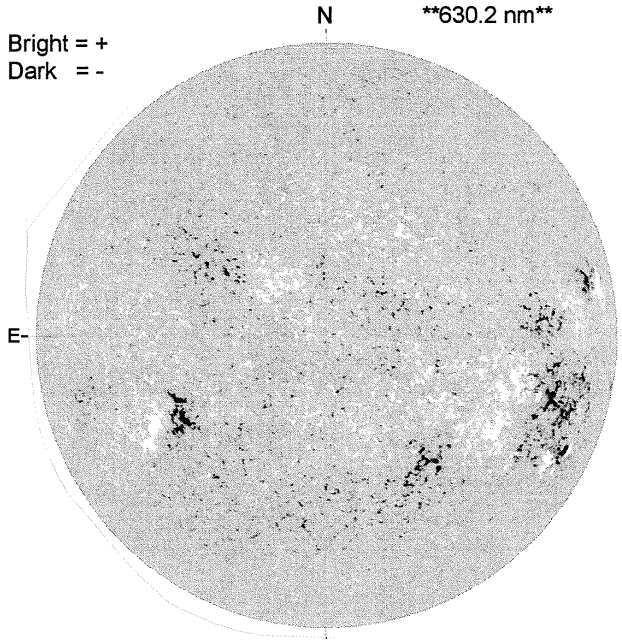

STANFORD MAGNETOGRAM

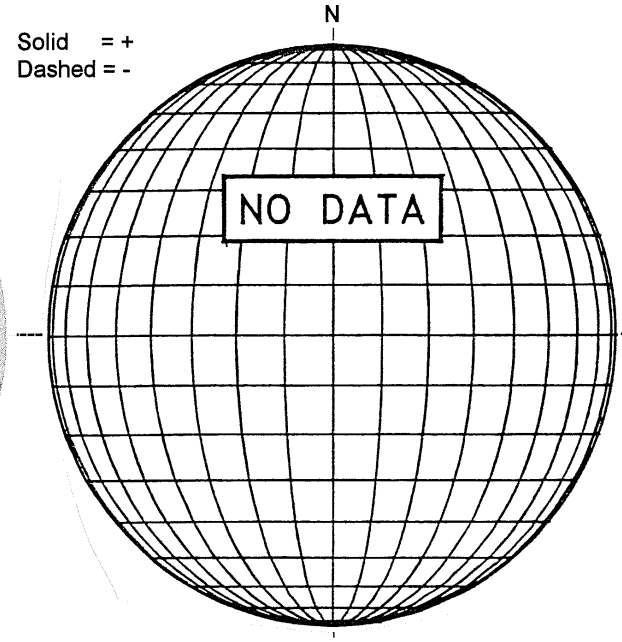

MT. WILSON MAGNETOGRAM

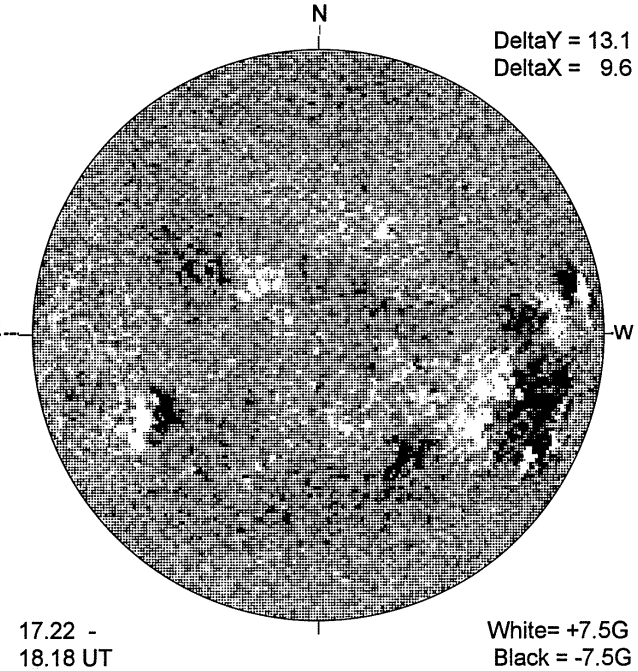

MEUDON H-ALPHA

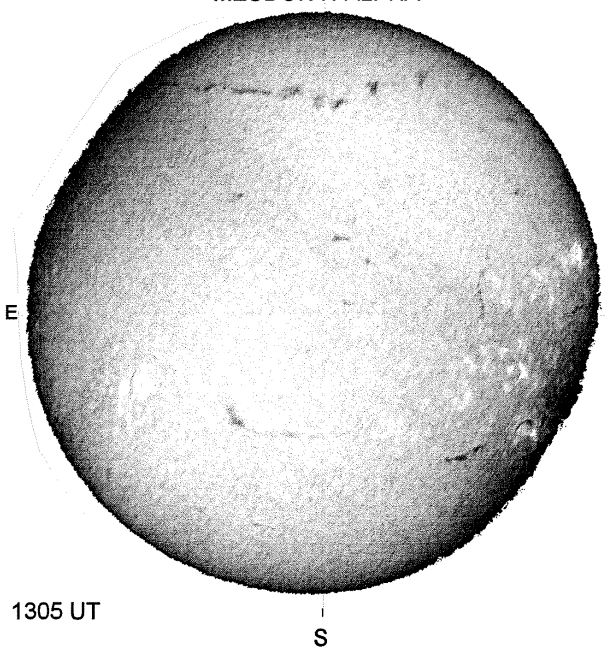

SAN VITO SUNSPOT

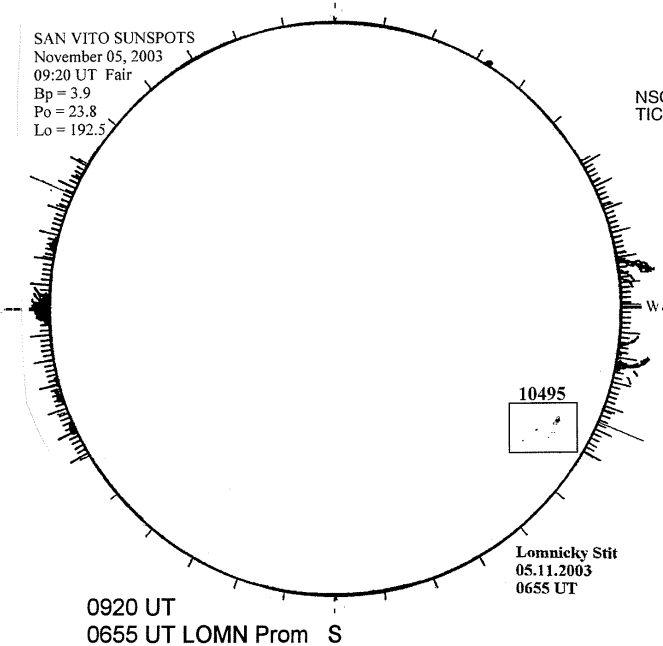
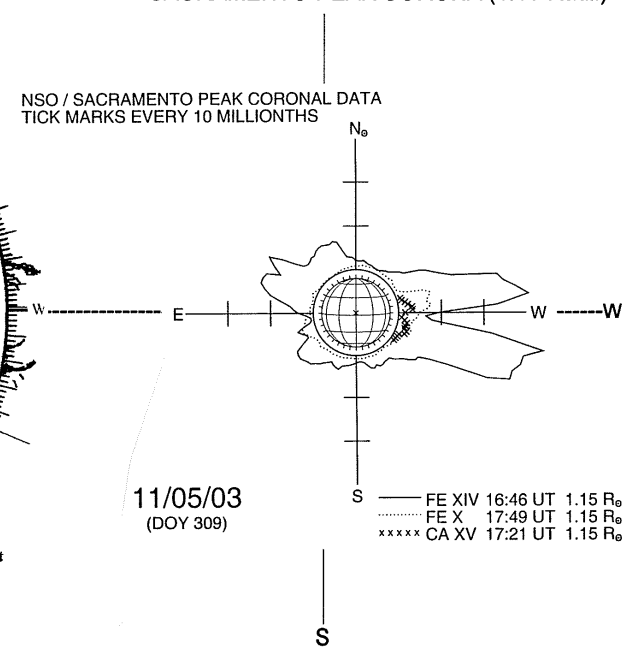
SACRAMENTO PEAK CORONA (1.15 Radii)----