NOVEMBER 4, 2003 (P= 24.06, Bo = 4.12, Lo = 208.92)

KITT PEAK MAGNETOGRAM--SOLIS

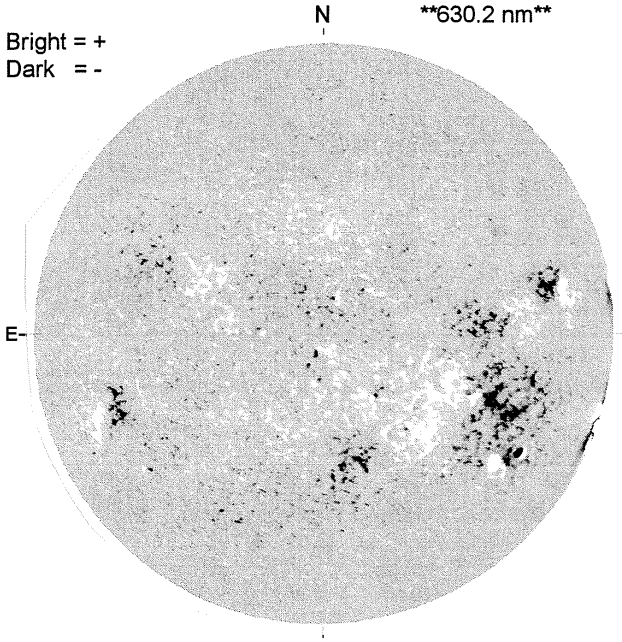

STANFORD MAGNETOGRAM

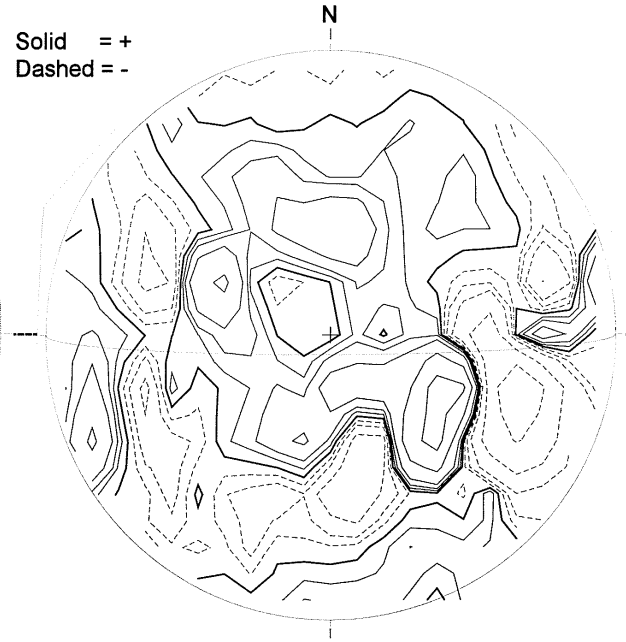

MT. WILSON MAGNETOGRAM

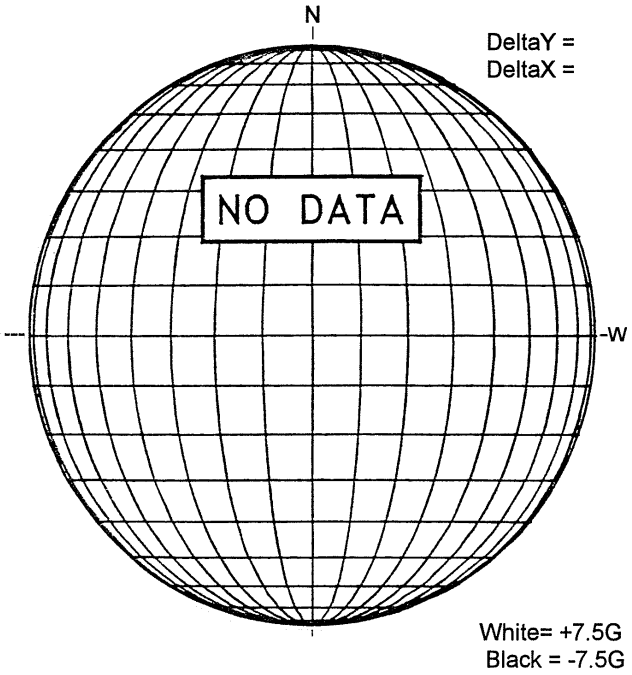

BIG BEAR H-ALPHA

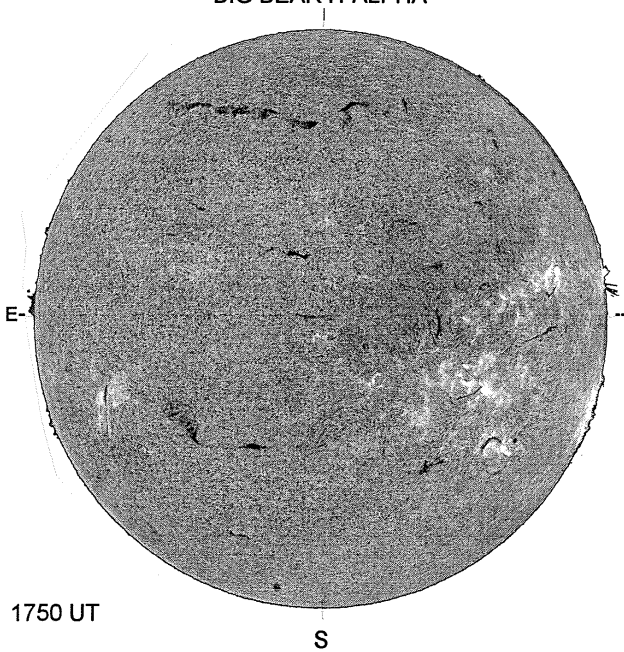

SAN VITO SUNSPOT

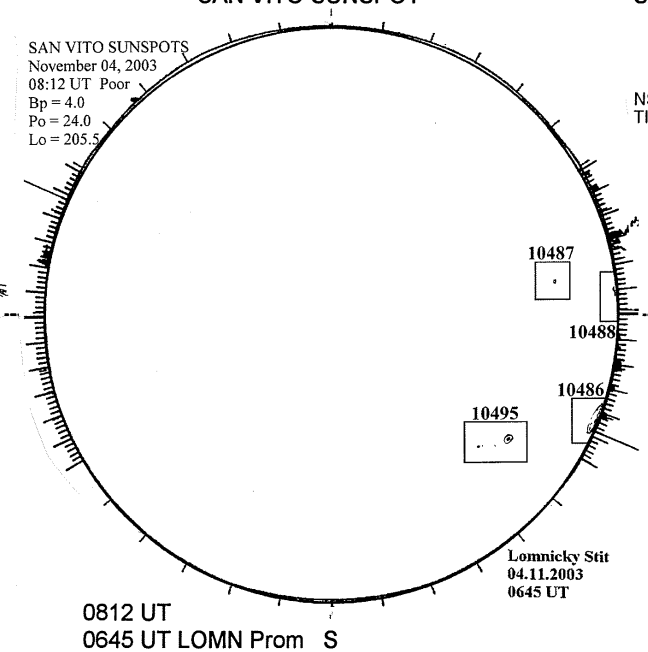
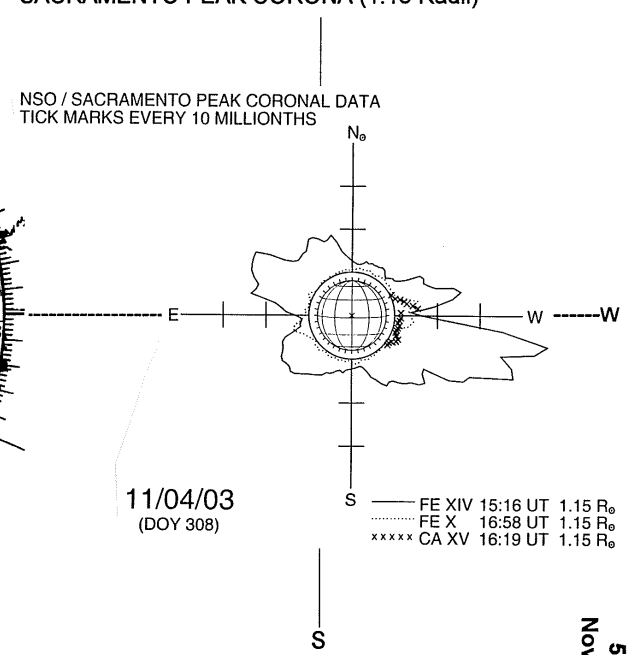
SACRAMENTO PEAK CORONA (1.15 Radii)----