OCTOBER 31, 2003 (P= 24.74, Bo = 4.52, Lo = 261.67)

KITT PEAK MAGNETOGRAM--SOLIS

630.2 nm

Bright = +
Dark = -

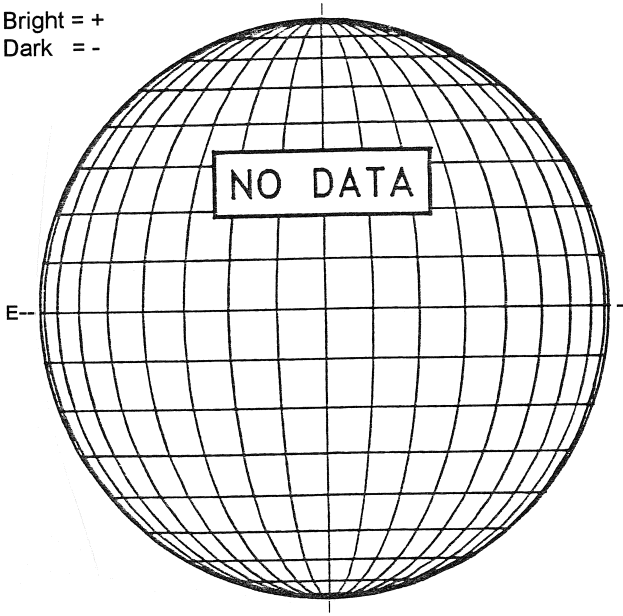

STANFORD MAGNETOGRAM

Solid = +
Dashed = -

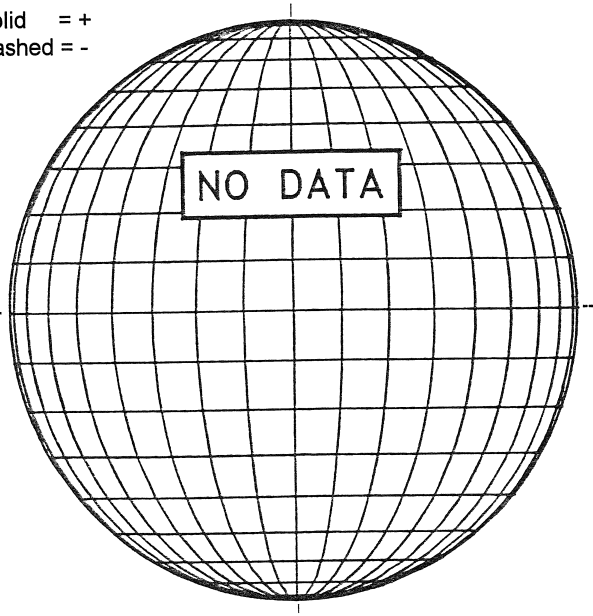

MT. WILSON MAGNETOGRAM

DeltaY =
DeltaX =

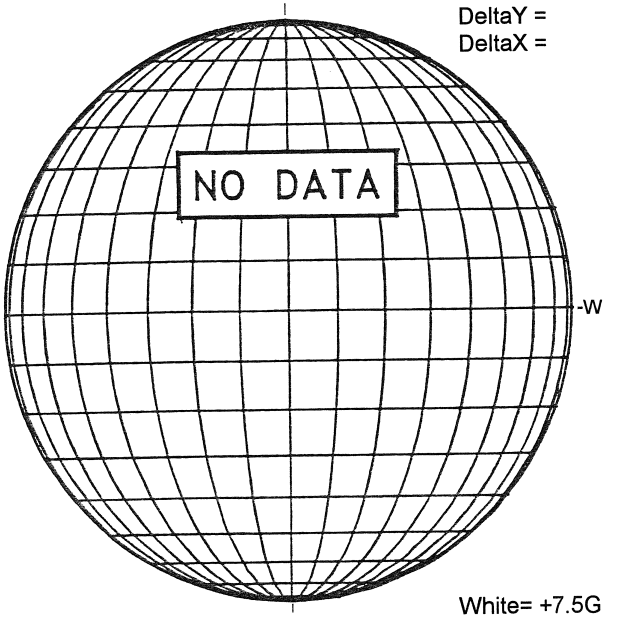

White= +7.5G
Black = -7.5G

CATANIA H-ALPHA

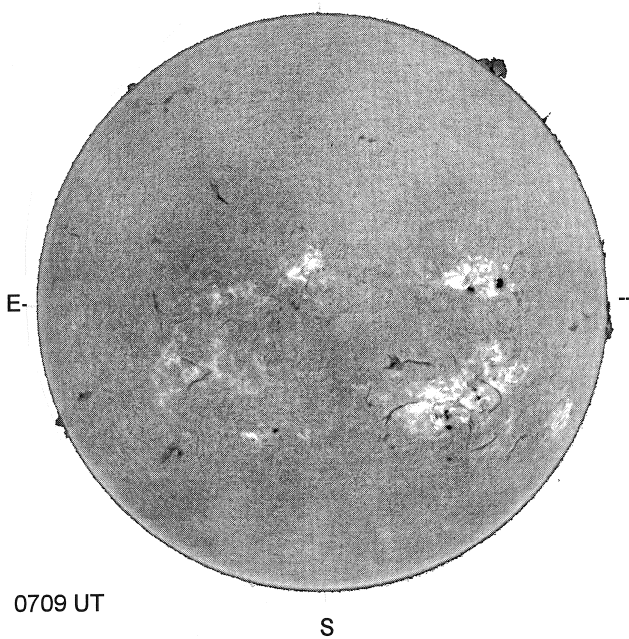

0709 UT

HOLLOMAN SUNSPOT

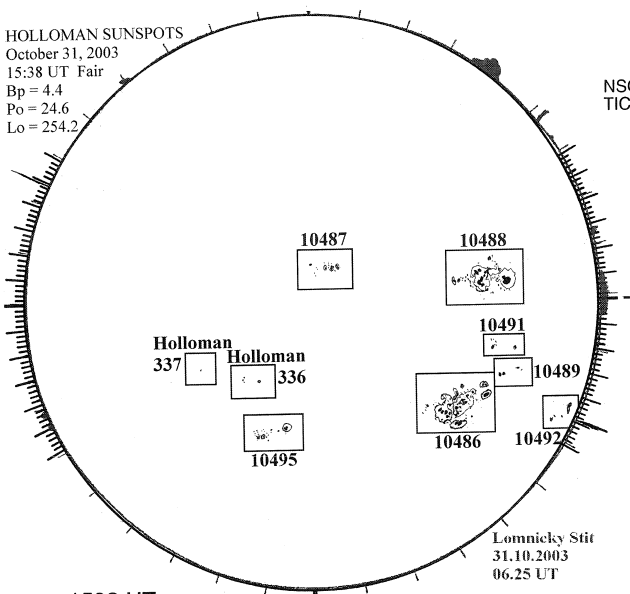

1538 UT
0625 UT LOMN Prom S

SACRAMENTO PEAK CORONA (1.15 Radii)----

NSO / SACRAMENTO PEAK CORONAL DATA
TICK MARKS EVERY 10 MILLIONTHS

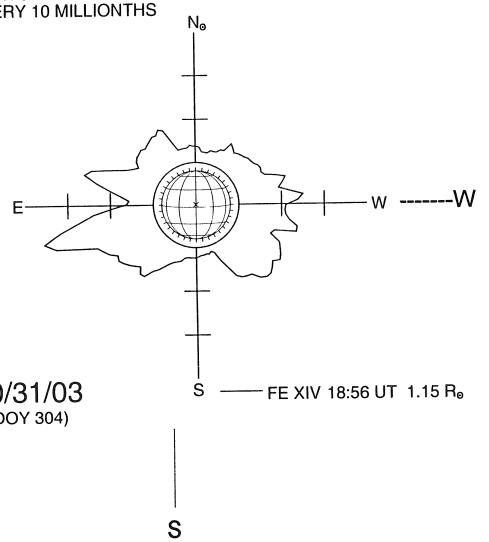

10/31/03
(DOY 304)