OCTOBER 24, 2003 (P= 25.63, Bo = 5.18, Lo = 353.98)

KITT PEAK MAGNETOGRAM--SOLIS

N **630.2 nm**

Bright = +
Dark = -

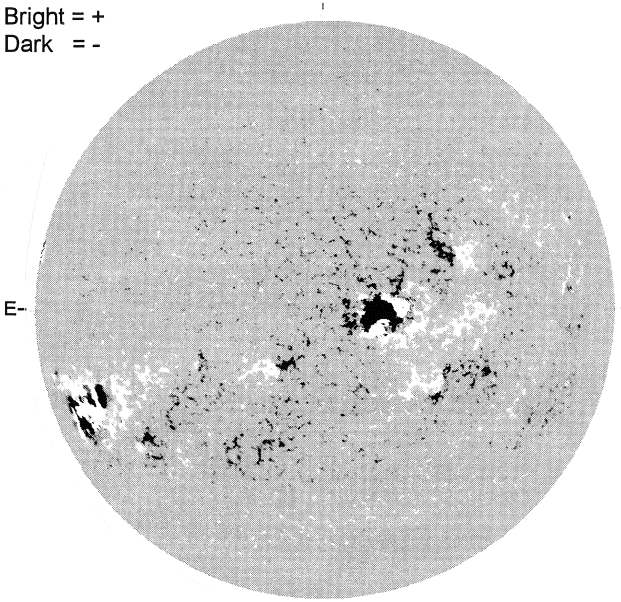

E-

1752 UT

STANFORD MAGNETOGRAM

N

Solid = +
Dashed = -

2108 UT

MT. WILSON MAGNETOGRAM

N

DeltaY = 13.0
DeltaX = 9.6

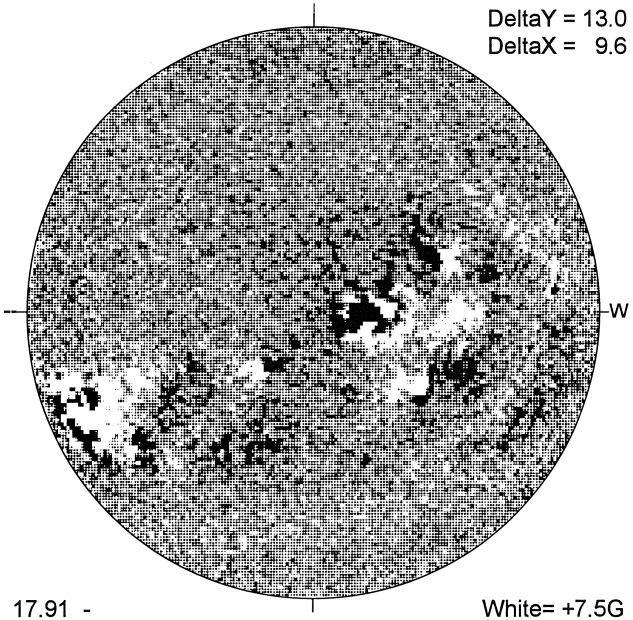

-W

17.91 -
18.87 UT

White= +7.5G
Black = -7.5G

BIG BEAR H-ALPHA

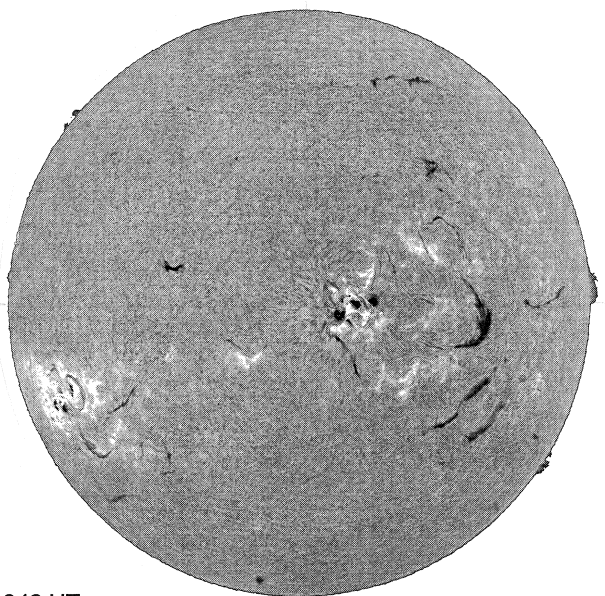

E

1646 UT

S

HOLLOMAN SUNSPOT

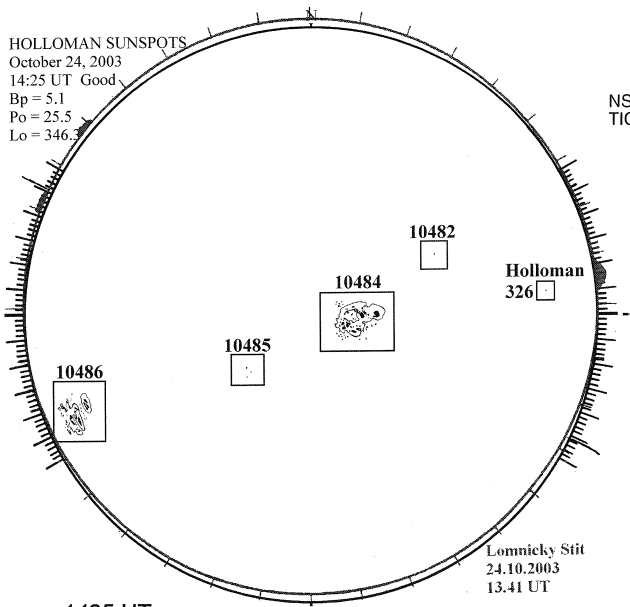

1425 UT
1341 UT LOMN Prom S

SACRAMENTO PEAK CORONA (1.15 Radii)----

NSO / SACRAMENTO PEAK CORONAL DATA
TICK MARKS EVERY 10 MILLIONTHS

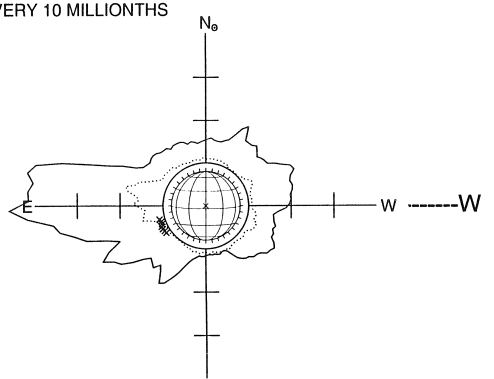

10/24/03
(DOY 297)

FE XIV 20:13 UT 1.15 R⊙
FE X 20:59 UT 1.15 R⊙
xxxxx CA XV 15:12 UT 1.15 R⊙

S

67
Oct 0: